LESTER BUILDINGS	Quote #		Date:	10/6/2026
	Order #	637515	Version:	
	Ship Date:		Plant:	LP
	Improv#	T06A-15079-08-05	Price File:	QP072326

Project Name	Service Master: 64'x80'x18' High		
Dealer	Prehn Building Systems Inc. 6158 Rome Circle NW Rochester, MN 55901 507-259-6203	Customer	Service Master 4521 US Hwy 14 Rochester, MN 55901 507-208-1285

Service Master
4521 US Hwy 14
Rochester, MN 55901
Service Master: 64'x80'x18' High
LESTER ORDER # 637515
Prehn Building Systems Inc.

STRUCTURAL CALCULATIONS INDEX

TITLE	PAGE #
1. 637515 Snow Load	1
2. 637515 Wind Load	2-4
3. 637515 Office Design Report	5-60
4. 637515 Frame Analysis	61-63
5. 637515 Truss Designs	64-80
6. 637515 Bldg Loads	81-84
7. 637515 Flexible Diaphragm Analysis	85-118
8. 637515 Connection Summary	119-138

I HEREBY CERTIFY THAT THIS PLAN, SPECIFICATION, OR REPORT WAS PREPARED BY ME OR UNDER MY DIRECT SUPERVISION AND THAT I AM A DULY LICENSED PROFESSIONAL ENGINEER UNDER THE LAWS OF THE STATE OF MINNESOTA.

SIGNATURE: Kenneth F. Lee

NAME: KENNETH F. LEE

DATE: 10/06/2026 LICENSE NUMBER: 50104

Digitally signed by Kenneth F. Lee

ALL SEALS FOR THIS SET OF DRAWINGS ARE APPLIED TO THE COVER SHEET

THIS CERTIFICATION IS LIMITED TO THE STRUCTURAL DESIGN OF THE FRAMING AND COVERING PARTS MANUFACTURED BY LESTER BUILDING SYSTEMS, ALL OTHER ITEMS SUCH AS EQUIPMENT, VENTILATION, PLUMBING,ELECTRICAL, ERECTION, DOORS FIRE RESISTIVE REQUIREMENTS, INSPECTION, CONCRETE FLOORS, ETC. IS THE RESPONSIBILITY OF OTHERS.

LESTER BUILDINGS	SNOW LOAD	Job: 637515
		Page: 1 of 1
	Dealer: Prehn Building Systems Inc.	By: kfl
	Owner: Service Master	Date: 10/6/2026

SNOW LOAD CALCULATIONS - ASCE 7-16

BUILDING GEOMETRY
Width: 64'-0" Length: 80'-1 1/2" Roof Slope: 3/12 (14.04 Degrees)

BUILDING LOCATION and GROUND SNOW LOAD
Building Located in OLMSTED County, MN
Minimum CODE Ground Snow Load = 50 psf (Allowable)
Design Ground Snow Load = 50 psf

Estimated Mean Recurrence Interval (MRI) of ULTIMATE Snow Load Event = 210 yr
Estimated Annual Probability of ULTIMATE Snow Load Event Being Exceeded (APBE) = 0.48 %

SLOPED ROOF SNOW LOAD: Ps = 42 psf
Ps = 0.7 x Ce x Ct x I x Pg x Cs Refer to ASCE 7-16 Sections 7.3 and 7.4
Ce = 1 Wind Exposure Category: C Roof Exposure: Partial See ASCE 7-16 Section 7.3.1
Ct = 1.2 Bldg Thermal Condition: Unheated or Open Air See ASCE 7-16 Section 7.3.2
I = 1 Bldg Category: General Use See ASCE 7-16 Table 1.5-1
Pg = 50 psf Ground Snow Load - OLMSTED County, MN
Cs = 1 Unobstructed Slippery Surfaces, Cold Roof See ASCE 7-16 Section 7.4.2
Ps = 0.7 x 1 x 1.2 x 1 x 50 x 1
= 42 psf

MINIMUM LOW SLOPE ROOF SNOW LOAD
Minimum Roof Snow Load Angle = 15 Degrees
Actual Roof Snow Load Angle = 14.04 Degrees
Minimum Roof Snow Load is applied to the roof snow load.
Section 7.3.4 defines minimum roof snow load as Pm = Is x Pg where Pg is truncated at 20 psf.
Is = I = 1
Pg = Lesser of code minimum ground snow load (50 psf) and 20 psf.
Pg = 20 psf
Pm = Is x Pg = 1 x 20 psf = 20 psf.

LESTER BUILDINGS	WIND LOAD - MWRS	Job: 637515
		Page: 1 of 3
	Dealer: Prehn Building Systems Inc.	By: kfl
	Owner: Service Master	Date: 10/6/2026

ASCE 7 (Low Rise) 2016 -- Gabled Roofs.

Location	OLMSTED County, MN		
Wind Speed (MPH)	115.0	Building Condition	Enclosed
Exposure	C	Occupancy	General Use
Importance Factor	NA	Risk Category	II
Building Width	64 ft	Building Length	80.12 ft
Left Eave Height	18.92 ft	Right Eave Height	18.92 ft
Left Roof Slope	3 / 12	Right Roof Slope	3 / 12
Left Overhang	2 ft	Right Overhang	2 ft
Mean Roof Height	22.92 ft	Roof Peak Height	26.92 ft
Bay Spacing	8 ft		

MAIN WIND FORCE RESISTING SYSTEM

Velocity Pressure (@ mean roof ht) qz = 16.06 psf

$qz = 0.6 \times 0.00256 \times Kz \times Kzt \times Kd \times Ke \times V^2$

$qz = 0.6 \times 0.00256 \times 0.93 \times 1 \times 0.85 \times 1 \times 115^2 = 16.06$ psf

WIND LOAD

(Cases 1 & 2 Wind from Left, Cases 3 & 4 Wind from Right, Cases 5 & 6 Longitudinal Wind)
(Internal Pressure: Cases 1, 3 & 5 Negative, Cases 2, 4 & 6 Positive)

Zone	Case 1	Case 2	Case 3	Case 4	Case 5	Case 6
1	10.60	4.82	10.60	4.82	9.31	3.53
1E	14.45	8.67	14.45	8.67	12.69	6.91
2	-8.19	-13.97	-8.19	-13.97	-8.19	-13.97
2E	-14.29	-20.08	-14.29	-20.08	-14.29	-20.08
2OH	-22.32	-22.32	-22.32	-22.32	-22.32	-22.32
3	-4.18	-9.96	-4.18	-9.96	-3.05	-8.83
3E	-7.23	-13.01	-7.23	-13.01	-5.62	-11.40
3OH	-7.07	-7.07	-7.07	-7.07	-5.94	-5.94
4	-3.05	-8.83	-3.05	-8.83	-1.77	-7.55
4E	-6.10	-11.88	-6.10	-11.88	-4.01	-9.80
5	-4.34	-10.12	-4.34	-10.12	-4.34	-10.12
6	-4.34	-10.12	-4.34	-10.12	-4.34	-10.12

Load Case	Net Horiz. Wind Force (lb/bay)	Max. Wall Load (psf)	Windward Wall Vert. Reaction (lb/bay)	Leeward Wall Vert. Reaction (lb/bay)
1	2066	10.60	-2397	-1240
2	2066	8.83	-3876	-2720
3	2066	10.60	-2397	-1240
4	2066	8.83	-3876	-2720

Edge distance a is 6.4 Feet. All loads are psf.

Zone	Description	Zone	Description
1	Windward Wall	1E	Windward Wall Edge
2	Windward Roof	2E	Windward Roof Edge
2OH	Windward Roof OH	3	Leeward Roof
3E	Leeward Roof Edge	3OH	Leeward Roof OH
4	Leeward Wall	4E	Leeward Wall Edge
5	Perpendicular Wall	6	Perpendicular Wall

MINIMUM DESIGN WIND LOAD

Minimum design wind load for MWRS shall be 0.6 x 8 psf = 4.8 psf applied to roof projected area and 0.6 x 16 psf = 9.6 psf applied to wall projected areas. See ASCE 7-16 Section 27.1.5.

LESTER BUILDINGS	WIND LOAD - MWRS	Job: 637515
		Page: 2 of 3
	Dealer: Prehn Building Systems Inc.	By: kfl
	Owner: Service Master	Date: 10/6/2026

ASCE 7 (Low Rise) 2016 -- Gabled Roofs. (Continued)

NOTES:

1. This program assumes a rigid structure (Fundamental frequency less than or equal to 1 Hz.)
2. Additional analysis or testing may be required for topographic effects such as hills, ridges, or escarpments.
3. Channeling effects or buffeting in the wake of upwind obstructions warrant special consideration.
4. IT IS THE ENGINEER'S RESPONSIBILITY TO ENSURE THE ACCURACY OF THESE RESULTS.

LESTER BUILDINGS	WIND LOAD - C&C	Job: 637515
		Page: 3 of 3
	Dealer: Prehn Building Systems Inc.	By: kfl
	Owner: Service Master	Date: 10/6/2026

ASCE 7 (Low Rise) 2016 -- Gabled Roofs.

—

Location	OLMSTED County, MN		
Wind Speed (MPH)	115.0	Building Condition	Enclosed
Exposure	C	Occupancy	General Use
Importance Factor	NA	Risk Category	II
Building Width	64 ft	Building Length	80.12 ft
Left Eave Height	18.92 ft	Right Eave Height	18.92 ft
Left Roof Slope	3 / 12	Right Roof Slope	3 / 12
Left Overhang	2 ft	Right Overhang	2 ft
Mean Roof Height	22.92 ft	Roof Peak Height	26.92 ft
Bay Spacing	8 ft		

COMPONENTS AND CLADDING

Velocity Pressure (@ mean roof ht) qz = 16.06 psf

$qz = 0.6 \times 0.00256 \times Kz \times Kzt \times Kd \times Ke \times V^2$

$qz = 0.6 \times 0.00256 \times 0.93 \times 1 \times 0.85 \times 1 \times 115^2 = 16.06$ psf

Component Tributary Areas: Bay Spacing = 8'-0"

Wall: Girt Spacing = 3'-0"
Girt Tributary Area = 24 sq ft = 8 x 3

Roof: Purlin Spacing = 2'-0" Less than 1/3 Bay Spacing - use 1/3 Bay Spacing
Purlin Tributary Area = 21.33 sq ft = 8 x 8 / 3

Effective Wind Area	Zone 1		Zone 2e		Zone 2n	
(sq ft)	P	S	P	S	P	S
21.33	10.28	-34.05	10.28	-34.05	10.28	-43.52

Effective Wind Area	Zone 2r		Zone 3e		Zone 3r	
(sq ft)	P	S	P	S	P	S
21.33	10.28	-43.52	10.28	-43.52	10.28	-51.23

Effective Wind Area	Zone 1-OH		Zone 2e-OH		Zone 2n-OH	
(sq ft)	P	S	P	S	P	S
21.33	0.00	-39.51	0.00	-39.51	0.00	-50.59

Effective Wind Area	Zone 2r-OH		Zone 3e-OH		Zone 3r-OH	
(sq ft)	P	S	P	S	P	S
21.33	0.00	-50.59	0.00	-56.05	0.00	-62.79

Effective Wind Area	Zone 4		Zone 5	
(sq ft)	P	S	P	S
24.00	17.83	-19.43	17.83	-23.29

Edge distance a is 6.4 Feet. All loads are psf.

Zone	Description	Zone	Description
1	Roof	1-OH	Overhang
2e	Roof Edge - Eave	2e-OH	Overhang Edge - Eave
2n	Roof Edge - Gable	2n-OH	Overhang Edge - Gable
2r	Roof Edge - Ridge	2r-OH	Overhang Edge - Ridge
3e	Roof Corner - Eave	3e-OH	Overhang Corner - Eave
3r	Roof Corner - Ridge	3r-OH	Overhang Corner - Ridge
4	Wall	5	Wall Edge

Office Design Report

Project: T06A-15079-08-05		Oct 6, 2026
Description: 64'x80"x18'high - Add to Proj. 113952 - LQ 51007-00 / 51117-00		
Customer: Service Master	**Market:** COMMERCIAL	
County: Olmsted	**Plant:** 101	**Version:** 1.50.345
State: MN	**Price File:** QP072326	**BOM Version:** 343

Note: The information presented in this report is based on a preliminary design using the input data provided. Actual building component types, grades and dimensions are subject to change per Lester Engineering design review. The final design will meet the loads specified below. Lester's Structural Warranty reflects these loads.

Building Information

Building Unit: 1	**Description:** Main Building	**Type:** Uni-Frame Embedded	
Width: 64'-0"	**Clear Height:** 17'-8" (Bldg. Def.)	**Top Chord Slope:** 3 / 12 **Btm Chord Slope:** 0 / 12	
Length: 80'-0"	**Eave Height:** 18'-11"	**Roof System:** Simple Gable	
Truss Plies:	Auto	**Heel Height:**	15"
SW Bay Spacing: 3@ 7'-0", 1@ 4'-0", 6@ 8'-0", 1@ 7'-0"			
EW1 Bay Spacing: 8@ 8'-0"			
EW2 Bay Spacing: 3@ 9'-0", 1@ 10'-0", 3@ 9'-0"			
Overhangs (in):	**S1** = 24	**S2** = 24	**E1** = 0	**E2** = 12
Diaphragm/Knee Braces: Use Diaphragm WITHOUT Knee Braces.	**Liner:** Yes	**Ceiling:** Yes	

Foundations

Foundation Type: Poured Footing, floor	**Wall Width (in):** N/A for Embedded Building
Frost Depth (in): 48	**Grade to Top of Wall (in):** N/A
Floor Thickness (in): 6	**Curb Height (in):** N/A
Anchor Type: Anchor Angle - Where Req.	**Soil Allowable Bearing Pressure (psf):** 3000
Concrete Strength (psi): 3000	**Soil Allowable Lateral Pressure (psf per ft depth):** 200

Building Loads - Wind

Building Code: IBC-2021	**Risk Category:** II - General Use
Code Wind Type: Ultimate	**Wind Exposure:** C
Code Minimum Ultimate Wind Speed (mph): 115	**Building Enclosure for Wind:** Enclosed
Equivalent Allowable Wind Speed (mph): 90.9	**Wind Importance Factor:** NA
Design Ultimate Wind Speed (mph): 115	**Estimated MRI Ultimate Wind (yr):** 900
Equivalent Allowable Wind Speed (mph): 90.9	
Warranted Wind Speed (mph): 90.9	

Building Loads - Snow

Building Code: IBC-2021	**Code Minimum Ground Snow Load (psf):** 50
Design Ground Snow Load (psf): 50	**Snow Importance Factor:** 1
Design Uniform Roof SL (psf): 42	**Estimated MRI Ultimate Snow (yr):** 210
Snow Retention Trim Over S1: No	**Snow Retention Trim Over S2:** No
Pg = 50 psf = Ps / (0.7 x Ce x Ct x I x Cs) = 42 / (0.7 x 1 x 1.2 x 1 x 1)	

Building Loads - Gravity	
Roof Live Load (psf): 13.12	Truss Bottom Chord Load (psf): 10
Roof Dead Load (psf): 4	Design Bottom Chord Braces for Ceiling Load: Yes
	Wall Dead Load (psf): 5.5

Wall Loads – Wind Load	
Side Wall Pressure (psf): 10.6	Side Wall Suction (psf): -10.12
End Wall Pressure (psf): 9.31	End Wall Suction (psf): -10.12
Components and Cladding (psf): -19.43	

Roof Loads – Unbalanced Snow Load, Wind Load, Actual Dead Load		
Unbalanced Snow Load	Wind Load (Perpendicular To Ridge)	Wind Load (Parallel To Ridge)
Windward (psf): 12.6	Windward (psf): -13.97	Windward (psf): -13.97
Leeward (psf): 42	Leeward (psf): -9.96	Leeward (psf): -8.83
Lee Surcharge (psf): 23.6	Components and Cladding (psf): 34.05	
Lee Surcharge Length(ft): 12.27	Actual Roof + Ceiling Dead Load (psf): 5.5	

Columns and Secondary Framing

Material					
Member ID	Component	Locations	Plies	Lumber (Size Species Grade)	Matl. ID
CJ1	Btm Chd Brace	C1	1	2x6 SPF No.2	317
E2:C2	Column (End)	E2:C2, E2:C7	1	F666 Lester No.1	5275
E2:C3	Column (End)	E2:C3, E2:C6	1	F666 Lester No.1	5275
E2:C4	Column (End)	E2:C4, E2:C5	1	F666 Lester No.1	5275
EP1:C2	Column (Part.)	EP1:C2, EP1:C8	1	F666 Lester No.1	5275
EP1:C3	Column (Part.)	EP1:C3, EP1:C7	1	F666 Lester No.1	5275
EP1:C4	Column (Part.)	EP1:C4, EP1:C6	1	F666 Lester No.1	5275
EP1:C5	Column (Part.)	EP1:C5	1	F666 Lester No.1	5275
GL1	Liner Girt (Flush)	E2L, E1L, S1L, S2L	1	2x4 Lester No.2	343
GP1	Liner Girt (Flush)	EP1L	1	2x6 Lester No.2	2015
GW1	Wall Girt (Bypass)	S1, S2	1	2x6 Lester No.1	2020
GW4	Wall Girt (Bypass)	E2, E1	1	2x6 DFL/SYP M-23/2400 MSR 1.8E	1745
H:S1:D14	Structural Header	S1:D14	3	1-3/4x16 SP 3100F-2.0E Max-Lam LVL	2423
H:S1:D15	Structural Header	S1:D15	3	1-3/4x16 SP 3100F-2.0E Max-Lam LVL	2423
H:S1:D5	Structural Header	S1:D5	5	2x8 DFL/SYP M-23/2400 MSR 1.8E	1765
H:S1:D6	Structural Header	S1:D6	5	2x8 DFL/SYP M-23/2400 MSR 1.8E	1765
H:S2:D12	Structural Header	S2:D12	5	2x8 DFL/SYP M-23/2400 MSR 1.8E	1765
H:S2:D16	Structural Header	S2:D16	3	1-3/4x16 SP 3100F-2.0E Max-Lam LVL	2423
H:S2:D17	Structural Header	S2:D17	3	1-3/4x16 SP 3100F-2.0E Max-Lam LVL	2423
PR1	Purlin (Flush)	R1	1	2x6 Lester No.2	2015
PR1 UnbSnow	Purlin (Flush)	R1	1	2x6 Lester No.2	2015
PR2	Purlin (Flush)	R1	1	2x6 Lester No.2	2015
S1:C1	Column (Corner)	S1:C1	1	F666 Lester No.1	5275

S1:C10	Column (Side)	S1:C10, S1:C15, S2:C6	1	F666 Lester No.1	5275
S1:C12	Column (Side)	S1:C12, S2:C3, S2:C8	1	F666 DFL/SYP M-23/2400 MSR 1.8E	5290
S1:C16	Column (Side)	S1:C16	1	F6666 DFL/SYP M-23/2400 MSR 1.8E	5390
S1:C17	Column (Side)	S1:C17	1	F666 Lester No.1	5275
S1:C18 (Typ)	Column (Corner)	S1:C18, S2:C1	1	F666 Lester No.1	5275
S1:C2 (Typ)	Column (Side)	S1:C2, S1:C7, S1:C11, S2:C2, S2:C7, S2:C11, S2:C16	1	F6666 DFL/SYP M-23/2400 MSR 1.8E	5390
S1:C3	Column (Side)	S1:C3	1	F000 Lester No.1	7269
S1:C5	Column (Side)	S1:C5	1	F000 Lester No.1	7269
S1:C6	Column (Side)	S1:C6, S2:C12	1	F6666 DFL/SYP M-23/2400 MSR 1.8E	5390
S1:C8	Column (Side)	S1:C8	1	F6666 DFL/SYP M-23/2400 MSR 1.8E	5390
S2:C10	Column (Side)	S2:C10	1	F6666 DFL/SYP M-23/2400 MSR 1.8E	5390
S2:C13	Column (Side)	S2:C13	1	F666 Lester No.1	5275
S2:C15	Column (Side)	S2:C15	1	F666 Lester No.1	5275
S2:C17	Column (Corner)	S2:C17	1	F666 Lester No.1	5275
VS:E1:D13	Column (End V.S.)	E1:C2 to E1:C8	1	F66 Lester No.1	5175
WH:S1:C10	SW Wind Header	S1:C10	1	2x8 DFL/SYP M-23/2400 MSR 1.8E	1765
WH:S1:C12	SW Wind Header	S1:C12	1	2x8 DFL/SYP M-23/2400 MSR 1.8E	1765
WH:S1:C15	SW Wind Header	S1:C15	1	2x8 DFL/SYP M-23/2400 MSR 1.8E	1765
WH:S1:C17	SW Wind Header	S1:C17	1	2x8 DFL/SYP M-23/2400 MSR 1.8E	1765
WH:S1:C3	SW Wind Header	S1:C3	1	2x12 DFL/SYP M-23/2400 MSR 1.8E	1805
WH:S1:C5	SW Wind Header	S1:C5	1	2x12 DFL/SYP M-23/2400 MSR 1.8E	1805
WH:S2:C13	SW Wind Header	S2:C13	1	2x8 DFL/SYP M-23/2400 MSR 1.8E	1765
WH:S2:C15	SW Wind Header	S2:C15	1	2x8 DFL/SYP M-23/2400 MSR 1.8E	1765
WH:S2:C3	SW Wind Header	S2:C3	1	2x8 DFL/SYP M-23/2400 MSR 1.8E	1765
WH:S2:C6	SW Wind Header	S2:C6	1	2x8 DFL/SYP M-23/2400 MSR 1.8E	1765
WH:S2:C8	SW Wind Header	S2:C8	1	2x8 DFL/SYP M-23/2400 MSR 1.8E	1765

Geometry and Bracing

Member ID	Length	Spacing	Top Edge Brace Spacing	Bottom Edge Brace Spacing
CJ1	7'-9"	4'-0"	7'-9"	7'-9"
E2:C2	20'-8"	9'-0"	3'-0"	3'-0"
E2:C3	22'-11"	9'-0"	3'-0"	3'-0"
E2:C4	25'-2"	9'-6"	3'-0"	3'-0"
EP1:C2	20'-5"	8'-0"	1'-4"	1'-4"
EP1:C3	22'-5"	8'-0"	1'-4"	1'-4"
EP1:C4	24'-5"	8'-0"	1'-4"	1'-4"
EP1:C5	26'-5"	8'-0"	1'-4"	1'-4"
GL1	9'-6"	3'-0"	1'-0"	9'-6"
GP1	7'-6"	1'-4"	1'-0"	7'-6"
GW1	7'-6"	3'-0"	1'-0"	7'-6"
GW4	9'-7 1/2"	2'-8"	1'-0"	9'-7 1/2"
H:S1:D14	12'-0"	0'-0"	7'-9"	12'-0"
H:S1:D15	12'-0"	0'-0"	8'-0"	12'-0"
H:S1:D5	4'-9"	0'-0"	2'-4 1/2"	4'-9"
H:S1:D6	4'-3"	0'-0"	4'-3"	4'-3"
H:S2:D12	4'-7 1/2"	0'-0"	2'-3 3/4"	4'-7 1/2"
H:S2:D16	12'-0"	0'-0"	8'-0"	12'-0"
H:S2:D17	12'-0"	0'-0"	7'-9"	12'-0"
PR1	7'-9 3/4"	2'-0"	1'-0"	7'-9 3/4"

PR1 UnbSnow	7'-9 3/4"	1'-7"	1'-0"	7'-9 3/4"
PR2	7'-9"	2'-0"	1'-0"	7'-9"
S1:C1	18'-3 1/2"	7'-6 3/8"	3'-0"	3'-0"
S1:C10	18'-3 1/2"	4'-0"	3'-0"	3'-0"
S1:C12	18'-3 1/2"	4'-0"	3'-0"	3'-0"
S1:C16	18'-3 1/2"	5'-7 7/8"	3'-0"	3'-0"
S1:C17	18'-3 1/2"	3'-6 3/8"	3'-0"	3'-0"
S1:C18 (Typ)	18'-3 1/2"	8'-0 3/8"	3'-0"	3'-0"
S1:C2 (Typ)	18'-3 1/2"	8'-0"	3'-0"	3'-0"
S1:C3	18'-3 1/2"	3'-6"	3'-0"	3'-0"
S1:C5	18'-3 1/2"	3'-6"	3'-0"	3'-0"
S1:C6	18'-3 1/2"	4'-6"	3'-0"	3'-0"
S1:C8	18'-3 1/2"	8'-0"	3'-0"	3'-0"
S2:C10	18'-3 1/2"	8'-0"	3'-0"	3'-0"
S2:C13	18'-3 1/2"	3'-6"	3'-0"	3'-0"
S2:C15	18'-3 1/2"	3'-6"	3'-0"	3'-0"
S2:C17	18'-3 1/2"	7'-6 3/8"	3'-0"	3'-0"
VS:E1:D13	8'-9"	8'-0"	3'-0"	3'-0"
WH:S1:C10	7'-6"	0'-0"	4'-2 1/4"	4'-2 1/4"
WH:S1:C12	7'-6"	0'-0"	4'-9 3/4"	4'-9 3/4"
WH:S1:C15	7'-6"	0'-0"	6'-3 3/4"	6'-3 3/4"
WH:S1:C17	6'-3 3/4"	0'-0"	4'-6"	4'-6"
WH:S1:C3	6'-6"	0'-0"	4'-3"	4'-3"
WH:S1:C5	6'-6"	0'-0"	4'-3"	4'-3"
WH:S2:C13	6'-6"	0'-0"	4'-3"	4'-3"
WH:S2:C15	6'-6"	0'-0"	4'-3"	4'-3"
WH:S2:C3	7'-6"	0'-0"	6'-3 3/4"	6'-3 3/4"
WH:S2:C6	7'-6"	0'-0"	4'-9 3/4"	4'-9 3/4"
WH:S2:C8	7'-6"	0'-0"	4'-2 1/4"	4'-2 1/4"

Uniform Loads

Member ID	Snow (psf)	Dead (psf)	Wind (psf)	Live (psf)	Member Weight (lb)	Add Member Weight
CJ1	0	10	0	0	12.92	False
E2:C2	0	5.5	9.31	13.12	0	True
E2:C3	0	5.5	9.31	13.12	0	True
E2:C4	0	5.5	9.31	13.12	0	True
EP1:C2	0	5.5	5	13.12	0	True
EP1:C3	0	5.5	5	13.12	0	True
EP1:C4	0	5.5	5	13.12	0	True
EP1:C5	0	5.5	5	13.12	0	True
GL1	0	0	5	0	11.85	False
GP1	0	0	5	0	14.7	False
GW1	0	0	-19.43	0	14.7	False
GW4	0	0	-19.43	0	18.86	False
H:S1:D14	0	0	0	0	257.18	True
H:S1:D15	0	0	0	0	257.18	True
H:S1:D5	0	0	0	0	61.37	True
H:S1:D6	0	0	0	0	54.91	True
H:S2:D12	0	0	0	0	59.76	True
H:S2:D16	0	0	0	0	257.18	True
H:S2:D17	0	0	0	0	257.18	True
PR1	42	4	10.28	20	15.31	False

PR1 UnbSnow	65.6	4	10.28	20	15.31	False
PR2	42	4	10.28	20	15.19	False
S1:C1	0	5.5	10.6	0	0	True
S1:C10	0	5.5	10.6	0	0	True
S1:C12	0	5.5	10.6	0	0	True
S1:C16	0	5.5	10.6	0	0	True
S1:C17	0	5.5	10.6	0	0	True
S1:C18 (Typ)	0	5.5	10.6	0	0	True
S1:C2 (Typ)	0	5.5	10.6	0	0	True
S1:C3	0	5.5	10.6	0	0	True
S1:C5	0	5.5	10.6	0	0	True
S1:C6	0	5.5	10.6	0	0	True
S1:C8	0	5.5	10.6	0	0	True
S2:C10	0	5.5	10.6	0	0	True
S2:C13	0	5.5	10.6	0	0	True
S2:C15	0	5.5	10.6	0	0	True
S2:C17	0	5.5	10.6	0	0	True
VS:E1:D13	0	0	9.31	0	0	False
WH:S1:C10	0	0	0	0	19.38	False
WH:S1:C12	0	0	0	0	19.38	False
WH:S1:C15	0	0	0	0	19.38	False
WH:S1:C17	0	0	0	0	16.31	False
WH:S1:C3	0	0	0	0	26.06	False
WH:S1:C5	0	0	0	0	26.06	False
WH:S2:C13	0	0	0	0	16.8	False
WH:S2:C15	0	0	0	0	16.8	False
WH:S2:C3	0	0	0	0	19.38	False
WH:S2:C6	0	0	0	0	19.38	False
WH:S2:C8	0	0	0	0	19.38	False

Concentrated Loads	
Member ID	**Point Loads – Location (in), Dead (lb), Snow (lb), Wind (lb) ; etc;**
H:S1:D14	93,3648.4,11423.6,-2886.7,-3710.1,3568.4,0
H:S1:D15	33,3648.4,11423.6,-2886.7,-3710.1,3568.4,0;129,3648.4,11423.6,-2886.7,-3710.1,3568.4,0
H:S1:D5	28.5,3192.4,9995.6,-2525.9,-3246.3,3122.4,0
H:S2:D12	27.75,3192.4,9995.6,-2525.9,-3246.3,3122.4,0
H:S2:D16	15,3648.4,11423.6,-2886.7,-3710.1,3568.4,0;111,3648.4,11423.6,-2886.7,-3710.1,3568.4,0
H:S2:D17	51,3648.4,11423.6,-2886.7,-3710.1,3568.4,0
S1:C2 (Typ)	219.5,3648.4,11423.6,-2886.7,-3710.1,3568.4,-3710.1

Stress Indices and Deflections					
Member ID	**Maximum Combined Stress Index (CSI)**	**Maximum Shear Stress Index (SSI)**	**Maximum Deflection (in)**	**Allowable Deflection**	**Maximum Deflection Ratio**
CJ1	0.5	0.201	0.111	L/240 DL+LL	L / 838
E2:C2	0.959	0.196	0.426	L/-1 DL+LL	L / 583
E2:C3	0.983	0.198	0.441	L/-1 DL+LL	L / 624
E2:C4	1.029	0.207	0.461	L/-1 DL+LL	L / 656
EP1:C2	0.584	0.103	0.343	L/-1 DL+LL	L / 732
EP1:C3	0.6	0.102	0.357	L/-1 DL+LL	L / 771
EP1:C4	0.609	0.102	0.37	L/-1 DL+LL	L / 809
EP1:C5	0.609	0.102	0.383	L/-1 DL+LL	L / 844
GL1	0.379	0.067	0.256	2.5 in.	L / 446
GP1	0.041	0.014	0.011	2.5 in.	L / 8182
GW1	0.998	0.122	1.171	2.5 in.	L / 77

GW4	0.791	0.14	2.51	2.5 in.	L / 47
H:S1:D14	0.692	0.536	0.236	L/180 DL+LL	L / 611
H:S1:D15	0.878	0.878	0.251	L/180 DL+LL	L / 574
H:S1:D5	0.905	0.881	0.119	L/240 LL Only	L / 479
H:S1:D6	0.003	0.003	0	L/180 DL+LL	NA
H:S2:D12	0.881	0.881	0.11	L/240 LL Only	L / 505
H:S2:D16	0.878	0.878	0.251	L/180 DL+LL	L / 574
H:S2:D17	0.692	0.536	0.236	L/180 DL+LL	L / 611
PR1	0.643	0.246	0.153	L/120 LL Only	L / 535
PR1 UnbSnow	0.771	0.295	0.183	L/120 LL Only	L / 447
PR2	0.835	0.279	0.256	L/120 LL Only	L / 364
S1:C1	0.794	0.094	0.262	L/-1 DL+LL	L / 838
S1:C10	1.029	0.197	0.531	L/-1 DL+LL	L / 414
S1:C12	0.609	0.21	0.513	L/-1 DL+LL	L / 428
S1:C16	0.715	0.108	0.28	L/-1 DL+LL	L / 784
S1:C17	0.491	0.093	0.262	L/-1 DL+LL	L / 838
S1:C18 (Typ)	0.132	0	0	L/-1 DL+LL	NA
S1:C2 (Typ)	0.751	0.157	0.414	L/120 DL+LL	L / 552
S1:C3	0.301	0.058	0.055	L/-1 DL+LL	L / 3991
S1:C5	0.288	0.057	0.055	L/-1 DL+LL	L / 3991
S1:C6	0.525	0.087	0.223	L/-1 DL+LL	L / 985
S1:C8	0.766	0.189	0.479	L/-1 DL+LL	L / 459
S2:C10	0.766	0.189	0.479	L/-1 DL+LL	L / 459
S2:C13	0.505	0.093	0.26	L/-1 DL+LL	L / 845
S2:C15	0.511	0.093	0.26	L/-1 DL+LL	L / 845
S2:C17	0.794	0.094	0.262	L/-1 DL+LL	L / 838
VS:E1:D13	0.221	0.099	0.102	L/-1 DL+LL	L / 1030
WH:S1:C10	0.24	0.111	0.05	2.5 in.	L / 1800
WH:S1:C12	0.262	0.135	0.049	2.5 in.	L / 1837
WH:S1:C15	0.179	0.167	0.024	2.5 in.	L / 3750
WH:S1:C17	0.107	0.086	0.015	2.5 in.	L / 5050
WH:S1:C3	0.067	0.049	0.005	2.5 in.	L / 15600
WH:S1:C5	0.067	0.049	0.005	2.5 in.	L / 15600
WH:S2:C13	0.115	0.077	0.017	2.5 in.	L / 4589
WH:S2:C15	0.114	0.077	0.017	2.5 in.	L / 4589
WH:S2:C3	0.19	0.177	0.026	2.5 in.	L / 3462
WH:S2:C6	0.247	0.127	0.046	2.5 in.	L / 1957
WH:S2:C8	0.254	0.118	0.053	2.5 in.	L / 1699

Supports and Reactions

Member ID	Maximum Reaction (lb)	Required Bearing (in)	Actual Bearing (in)	Support Locations
CJ1	155	0.24	1.5	0,93
E2:C2	3366.8	0	3.5	
E2:C3	3491.6	0	3.5	
E2:C4	3808	0	3.5	
EP1:C2	3507.4	0	3.5	
EP1:C3	3607.2	0	3.5	
EP1:C4	3706.8	0	3.5	
EP1:C5	3806.6	0	3.5	
GL1	71.2	0.08	1.5	0,114
GP1	25	0.03	1.5	0,90
GW1	218.6	0	1.5	0,90
GW4	249.4	0	1.5	0,115.5

H:S1:D14	9862.5	0.65	0	
H:S1:D15	17084.7	1.52	0	
H:S1:D5	6624.6	0.99	0	
H:S1:D6	27.5	0	0	
H:S2:D12	6623.8	0.99	0	
H:S2:D16	17084.6	1.52	0	
H:S2:D17	9862.5	0.65	0	
PR1	412.1	0.37	1.5	0,81.75
PR1 UnbSnow	493.6	0.44	1.5	0,81.75
PR2	356.5	0.42	1.5	0,93
S1:C1	8693	0	3.5	
S1:C10	591.2	0	3.5	
S1:C12	648.9	0	3.5	
S1:C16	14901.2	0	3.5	
S1:C17	463	0	3.5	
S1:C18 (Typ)	2455.4	0	3.5	0,F;219.5,RV
S1:C2 (Typ)	16133.9	0	3.5	0,F;219.5,O,Free,D0.331,Free,W;200
S1:C3	7157.4	0	3.5	
S1:C5	7157.4	0	3.5	
S1:C6	10958.2	0	3.5	
S1:C8	15964.2	0	3.5	
S2:C10	15964.2	0	3.5	
S2:C13	459.8	0	3.5	
S2:C15	459.8	0	3.5	
S2:C17	8693	0	3.5	
VS:E1:D13	0	0	3.5	
WH:S1:C10	231.5	0.23	1.5	0,90
WH:S1:C12	282.2	0.28	1.5	0,90
WH:S1:C15	349	0.35	1.5	0,90
WH:S1:C17	180.1	0.18	1.5	0,75.75
WH:S1:C3	139.7	0.14	1.5	0,78
WH:S1:C5	143.3	0.14	1.5	0,78
WH:S2:C13	161.6	0.16	1.5	0,78
WH:S2:C15	160.8	0.16	1.5	0,78
WH:S2:C3	370.2	0.37	1.5	0,90
WH:S2:C6	266	0.27	1.5	0,90
WH:S2:C8	245.6	0.25	1.5	0,90

Primary Framing - Trusses

Description						
Truss ID	**Description**	**Shape**	**Type**	**Plies**	**Span**	**Spacing**
T1	TR:64-00/2P/TRUS/8OC/42-4-10/24-OH-24/P3/15/T87-TFINK	Triangular	T87-TFINK	2	64'-0"	8'-0"

Truss Geometry and Bracing								
Truss ID	**Heel Height (in)**	**Left OH (in)**	**Right OH (in)**	**Face Cut (in)**	**Top Chord Slope (/12)**	**Purlin Spacing (in)**	**Bottom Chord Slope (/12)**	**Bottom Chord Brace Spacing (in)**
T1	15	24	24	5	3	24	0	48

Truss Loads						
Truss ID	TC Snow Load (psf)	TC Live Load (psf)	TC Dead Load (psf)	BC Dead Load (psf)	Weight (lb)	Add Truss Weight
T1	42	13.12	4	10	1233.61	False

Truss Material				
Truss ID	Location	Plies	Size / Species / Grade	Material ID
T1	Top Chord	2	2x10 DFL/SYP M-23/2400 MSR 1.8E	1785
T1	Bottom Chord	2	2x10 DFL/SYP M-23/2400 MSR 1.8E	1785
T1	Slider	2	2x6 Lester No.1	2020

Stress Indices and Deflection						
Truss ID	Top Chord CSI	Bottom Chord CSI	Web CSI	Maximum Deflection (in)	Allowable Deflection (in)	Maximum Deflection Ratio
T1	0.695	0.884	0.826	1.989	1	L / 387

Reactions and Supports						
Truss ID	Maximum Reaction (lb)	Req'd Bearing Length (in)	Actual Bearing Length (in)	Seat Cut (in)	Bearing Offset (in)	Butt Cut (in)
T1	15072	6.09	5.5	7	1.5	5.465

Truss Chord Markings		
Truss ID	Location	Purlin and Bottom Chord Brace Marking Layout
T1	Top Chord	7, 15.5097, 7 @ 19, 2 @ 24, 8, 16.3175, 7 @ 24
T1	Bottom Chord	16 @ 48

Truss to Column Connection		
Truss ID	Detail	Description
T1	HD633	(9) 1/4"X6" FlatLOK, High, Uni

Primary Framing – Column Details

Loads		
Member ID	Maximum Axial Load (lb)	Maximum Moment (ft-lb)
E2:C2	3366.8	3206.2
E2:C3	3491.6	3284.9
E2:C4	3808	3439.8
EP1:C2	3507.4	1952.2
EP1:C3	3607.2	2006.5
EP1:C4	3706.8	2035.2
EP1:C5	3806.6	2036.5
S1:C1	8693	1737
S1:C10	591.2	3439.8
S1:C12	648.9	3758
S1:C16	14901.2	2654.6
S1:C17	463	1642.3
S1:C18 (Typ)	2455.4	0
S1:C2 (Typ)	16133.9	3692.7
S1:C3	7157.4	2298.2
S1:C5	7157.4	2197.2
S1:C6	10958.2	2178.4
S1:C8	15964.2	4574.6
S2:C10	15964.2	4574.6
S2:C13	459.8	1687.4

S2:C15	459.8	1708.6
S2:C17	8693	1737
VS:E1:D13	0	714.7

End Columns – Gable Brace						
Member ID	Configuration	Number of Bays	Wind Pressure Horizontal Reaction (lb)	Wind Pressure Gable Brace Force (lb)	Wind Suction Horizontal Reaction (lb)	Wind Suction Gable Brace Force (lb)
E2:C2	DGB + BCB	1	1251.4	1061.8	1372.3	1315.1
E2:C3	DGB + BCB	1	1106.7	1040.2	1212.5	1313.4
E2:C4	GXB	1	1197.1	902.3	1309.5	1392.4
EP1:C2	N/A	1	0	0	0	0
EP1:C3	N/A	1	0	0	0	0
EP1:C4	N/A	1	0	0	0	0
EP1:C5	N/A	1	0	0	0	0
VS:E1:D13	DGB + BCB	1	338.7	63.8	368.3	287.2

Knee Brace		
Height (in)	Maximum Compression (lb)	Maximum Tension (lb)
N/A	N/A	N/A

Embedment and Anchorage			
Column ID	Restrained Embedment Depth	Unrestrained Embedment Depth	Anchorage
E2:C2	4'-6"	NA	Anchor Block
E2:C3	4'-6"	NA	Anchor Block
E2:C4	4'-6"	NA	Anchor Block
EP1:C2	4'-0"	NA	Anchor Block
EP1:C3	4'-0"	NA	Anchor Block
EP1:C4	4'-0"	NA	Anchor Block
EP1:C5	4'-0"	NA	Anchor Block
S1:C1	4'-0"	NA	Anchor Block
S1:C10	4'-6"	NA	Anchor Block
S1:C12	4'-9"	NA	Anchor Block
S1:C16	4'-0"	NA	Anchor Block
S1:C17	4'-0"	NA	Anchor Block
S1:C18 (Typ)	4'-0"	NA	Anchor Block
S1:C2 (Typ)	4'-6"	NA	Anchor Block
S1:C3	4'-0"	NA	Anchor Block
S1:C5	4'-0"	NA	Anchor Block
S1:C6	4'-0"	NA	Anchor Block
S1:C8	4'-9"	NA	Anchor Block
S2:C10	4'-9"	NA	Anchor Block
S2:C13	4'-0"	NA	Anchor Block
S2:C15	4'-0"	NA	Anchor Block
S2:C17	4'-0"	NA	Anchor Block

Flexible Diaphragm Analysis Results

Total Diaphragm Load (lb)	Diaphragm Propping Force (lb)	Maximum Frame Deflection (in)	Maximum Chord Tension (lb)	Maximum Diaphragm Force (lb)	Maximum E1 Reaction (lb)	Maximum E2 Reaction (lb)
8569.6	7303.9	0.329	438.6	3046.9	18.7	3461.1
9539.8 (Par.)	8135.8	0.504	822	4138.6	4501 (S1)	4637.9 (S2)

Building Diaphragm

Surfaces for Wind Perpendicular to Ridge (Par.) = Wind Parallel to Ridge					
Surface ID	Description	Effective Surface Length (ft)	Effective Opening Length (ft)	Effective Shear Capacity (lb)	Unit Shear Stiffness (lb/in)
E1	End Wall	0.3	63.7	0	6700
E2	End Wall	49	15	14832.3	13000
EP1	Partition (Par. EW)	64	0	12160	6300
S1	Side Wall	35.4	44.8	10916.3	6700
S1.1	Side Wall	0	0	1513.7	6700
S1.2	Side Wall	0	0	9402.6	13000
S2	Side Wall	41.2	38.9	12127.1	13000
S2.1	Side Wall	0	0	10613.4	13000
S2.2	Side Wall	0	0	1513.7	6700
C1	Ceiling	64	0	4608	0
C1.1	Ceiling	0	0	0	0
C1.2	Ceiling	0	0	4608	6300
R1	Roof	64	0	12416	6700
E1 (Par.)	End Wall	0.3	63.7	0	6700
E2 (Par.)	End Wall	49	15	14832.3	13000
EP1 (Par.)	Partition (Par. EW)	64	0	12160	6300
S1 (Par.)	Side Wall	35.4	44.8	10916.3	6700
S1.1 (Par.)	Side Wall	0	0	1513.7	6700
S1.2 (Par.)	Side Wall	0	0	9402.6	13000
S2 (Par.)	Side Wall	41.2	38.9	12127.1	13000
S2.1 (Par.)	Side Wall	0	0	10613.4	13000
S2.2 (Par.)	Side Wall	0	0	1513.7	6700
C1 (Par.)	Ceiling	80.1	0	4257	0
C1.1 (Par.)	Ceiling	0	0	0	0
C1.2 (Par.)	Ceiling	0	0	4257	6300
R1 (Par.)	Roof	80.1	0	15544.2	6700

Forces for Wind Perpendicular to Ridge (Par.) = Wind Parallel to Ridge					
Surface ID	Shear Force (lb)	Maximum Diaph. Shear (lb/ft)	Allowable Diaph. Shear (lb/ft)	Chord Force (lb)	Maximum Corner Force (lb)
E1	18.8	0	156	--	103.8
E2	3461	70.6	302.7	--	1583.6
EP1	4843.7	75.7	190	--	1715.5
S1	659.1	30.8	156	--	--
S1.1	42.2	8.4	156	--	--
S1.2	225.5	30.8	302.7	--	--
S2	659.6	25.2	302.7	--	--
S2.1	348.7	25.2	302.7	--	--
S2.2	-34.1	6.8	156	--	--
C1	670.3	10.5	0	96.5	--
C1.1	0	0	0	--	--
C1.2	670.3	-10.5	72	--	--
R1	2376.5	37.1	194	342.1	--
E1 (Par.)	0.7	0	156	--	--
E2 (Par.)	74.8	11	302.7	--	--
EP1 (Par.)	69.5	1.1	190	--	--
S1 (Par.)	4500.7	139	156	--	1549.3
S1.1 (Par.)	358.3	71.7	156	--	--
S1.2 (Par.)	1703.2	139	302.7	--	--

S2 (Par.)	4637.9	121.3	302.7	--	1919.4
S2.1 (Par.)	1675.2	121.3	302.7	--	--
S2.2 (Par.)	312.6	62.5	156	--	--
C1 (Par.)	734	12.4	0	180.9	--
C1.1 (Par.)	0	0	0	--	--
C1.2 (Par.)	-736.2	-12.5	72	--	--
R1 (Par.)	4138.8	51.7	194	732.2	--

Diaphragm Hardware

Location	Hardware Required	Detail	Description	Special Design Required
Ridge	No	NA	NA	No
Eave	No	NA	NA	No

Foundations

Foundation Material

Column ID	Location	Material	Volume	Diameter x Thickness (in)	Dead Load (lb)	Live Load (lb)	Total Load (lb)
E2:C2	End Wall	Poured	0.0436 CYD	18 x 8	1629.5	1737.3	3366.8
E2:C3	End Wall	Poured	0.0436 CYD	18 x 8	1752.8	1738.8	3491.6
E2:C4	End Wall	Poured	0.0436 CYD	18 x 8	1972.5	1835.5	3808
S1:C1	Corner	Poured	0.0776 CYD	24 x 8	2225.4	6467.6	8693
S1:C10	Side Wall	Poured	0.0436 CYD	18 x 8	591.2	0	591.2
S1:C12	Side Wall	Poured	0.0436 CYD	18 x 8	648.9	0	648.9
S1:C16	Side Wall	Poured	0.1456 CYD	31 x 9	4142.5	10758.7	14901.2
S1:C17	Side Wall	Poured	0.0436 CYD	18 x 8	463	0	463
S1:C18 (Typ)	Corner	Poured	0.0436 CYD	18 x 8	1195.8	1259.6	2455.4
S1:C2 (Typ)	Side Wall	Poured	0.1724 CYD	32 x 10	4711.1	11422.8	16133.9
S1:C3	Side Wall	Poured	0.0776 CYD	24 x 8	2161.5	4995.9	7157.4
S1:C5	Side Wall	Poured	0.0776 CYD	24 x 8	2161.5	4995.9	7157.4
S1:C6	Side Wall	Poured	0.091 CYD	26 x 8	3101.2	7857	10958.2
S1:C8	Side Wall	Poured	0.1724 CYD	32 x 10	4533.8	11430.4	15964.2
S2:C10	Side Wall	Poured	0.1724 CYD	32 x 10	4533.8	11430.4	15964.2
S2:C13	Side Wall	Poured	0.0436 CYD	18 x 8	459.8	0	459.8
S2:C15	Side Wall	Poured	0.0436 CYD	18 x 8	459.8	0	459.8
S2:C17	Corner	Poured	0.0776 CYD	24 x 8	2225.4	6467.6	8693

Member Reactions

Member ID	Reaction Member ID	Load Type	Location (in.)	Horizontal Reaction (lb)	Vertical Reaction (lb)	Moment Reaction (ft lb)
CJ1	R1:Truss BC	Dead	0	0	155	0
CJ1	R2:Truss BC	Dead	93	0	155	0
E2:C2	R1:Footing	Dead	0	0	1506.6	0
E2:C2	R1:Footing	DL (Self Wt)	0	0	121.4	0
E2:C2	R1:Footing	Roof Live	0	0	543.2	0
E2:C2	R1:Footing	Snow	0	0	1738.8	0
E2:C2	R1:Footing	Wind (P)	0	848.3	-339.1	2975.5
E2:C2	R1:Footing	Wind (S)	0	-919.2	-578.4	-3206.2
E2:C2	R2:Diaph.	Wind (P)	248	-368.1	0	0
E2:C2	R2:Diaph.	Wind (S)	248	409.3	0	0
E2:C2	R3:Diaph.	Wind (P)	216	1251.4	0	0

E2:C2	R3:Diaph.	Wind (S)	216	-1372.3	0	0
E2:C3	R1:Footing	Dead	0	0	1618	0
E2:C3	R1:Footing	DL (Self Wt)	0	0	134.8	0
E2:C3	R1:Footing	Roof Live	0	0	543.2	0
E2:C3	R1:Footing	Snow	0	0	1738.8	0
E2:C3	R1:Footing	Wind (P)	0	856	-339.1	3054.8
E2:C3	R1:Footing	Wind (S)	0	-926.8	-578.4	-3284.9
E2:C3	R2:Diaph.	Wind (P)	275	-42.4	0	0
E2:C3	R2:Diaph.	Wind (S)	275	52.1	0	0
E2:C3	R3:Diaph.	Wind (P)	216	1106.7	0	0
E2:C3	R3:Diaph.	Wind (S)	216	-1212.5	0	0
E2:C4	R1:Footing	Dead	0	0	1824.6	0
E2:C4	R1:Footing	DL (Self Wt)	0	0	148	0
E2:C4	R1:Footing	Roof Live	0	0	573.3	0
E2:C4	R1:Footing	Snow	0	0	1835.4	0
E2:C4	R1:Footing	Wind (P)	0	899.2	-357.9	3200.4
E2:C4	R1:Footing	Wind (S)	0	-973.6	-610.5	-3439.8
E2:C4	R2:Diaph.	Wind (P)	302	129.5	0	0
E2:C4	R2:Diaph.	Wind (S)	302	-136.5	0	0
E2:C4	R3:Diaph.	Wind (P)	216	1197.1	0	0
E2:C4	R3:Diaph.	Wind (S)	216	-1309.5	0	0
EP1:C2	R1:Footing	Dead	0	0	1536.4	0
EP1:C2	R1:Footing	DL (Self Wt)	0	0	123	0
EP1:C2	R1:Footing	Roof Live	0	0	577.3	0
EP1:C2	R1:Footing	Snow	0	0	1848	0
EP1:C2	R1:Footing	Wind (P)	0	478.1	-360.4	1952.2
EP1:C2	R1:Footing	Wind (S)	0	-478.1	-614.7	-1952.2
EP1:C2	R2:Diaph.	Wind (P)	251	59.7	0	0
EP1:C2	R2:Diaph.	Wind (S)	251	-59.7	0	0
EP1:C2	R3:Diaph.	Wind (P)	216	182.1	0	0
EP1:C2	R3:Diaph.	Wind (S)	216	-182.1	0	0
EP1:C3	R1:Footing	Dead	0	0	1624.4	0
EP1:C3	R1:Footing	DL (Self Wt)	0	0	134.8	0
EP1:C3	R1:Footing	Roof Live	0	0	577.3	0
EP1:C3	R1:Footing	Snow	0	0	1848	0
EP1:C3	R1:Footing	Wind (P)	0	477.7	-360.4	2006.5
EP1:C3	R1:Footing	Wind (S)	0	-477.7	-614.7	-2006.5
EP1:C3	R2:Diaph.	Wind (P)	275	22.9	0	0
EP1:C3	R2:Diaph.	Wind (S)	275	-22.9	0	0
EP1:C3	R3:Diaph.	Wind (P)	216	219.4	0	0
EP1:C3	R3:Diaph.	Wind (S)	216	-219.4	0	0
EP1:C4	R1:Footing	Dead	0	0	1712.4	0
EP1:C4	R1:Footing	DL (Self Wt)	0	0	146.4	0
EP1:C4	R1:Footing	Roof Live	0	0	577.3	0
EP1:C4	R1:Footing	Snow	0	0	1848	0
EP1:C4	R1:Footing	Wind (P)	0	477.1	-360.4	2035.2
EP1:C4	R1:Footing	Wind (S)	0	-477.1	-614.7	-2035.2

EP1:C4	R2:Diaph.	Wind (P)	299	10.5	0	0
EP1:C4	R2:Diaph.	Wind (S)	299	-10.5	0	0
EP1:C4	R3:Diaph.	Wind (P)	216	232.4	0	0
EP1:C4	R3:Diaph.	Wind (S)	216	-232.4	0	0
EP1:C5	R1:Footing	Dead	0	0	1800.4	0
EP1:C5	R1:Footing	DL (Self Wt)	0	0	158.2	0
EP1:C5	R1:Footing	Roof Live	0	0	577.3	0
EP1:C5	R1:Footing	Snow	0	0	1848	0
EP1:C5	R1:Footing	Wind (P)	0	475.2	-360.4	2036.5
EP1:C5	R1:Footing	Wind (S)	0	-475.2	-614.7	-2036.5
EP1:C5	R2:Diaph.	Wind (P)	323	4.2	0	0
EP1:C5	R2:Diaph.	Wind (S)	323	-4.2	0	0
EP1:C5	R3:Diaph.	Wind (P)	216	240.6	0	0
EP1:C5	R3:Diaph.	Wind (S)	216	-240.6	0	0
GL1	R1:Column	Wind (P)	0	71.2	0	0
GL1	R2:Column	Wind (P)	114	71.2	0	0
GP1	R1:Column	Wind (P)	0	25	0	0
GP1	R2:Column	Wind (P)	90	25	0	0
GW1	R1:Column	Wind (P)	0	-218.6	0	0
GW1	R2:Column	Wind (P)	90	-218.6	0	0
GW4	R1:Column	Wind (P)	0	-249.4	0	0
GW4	R2:Column	Wind (P)	115.5	-249.4	0	0
H:S1:D14	R1:Column	Dead	0	0	1292.1	0
H:S1:D14	R1:Column	DL (Self Wt)	0	0	128.6	0
H:S1:D14	R1:Column	Roof Live	0	0	1263.8	0
H:S1:D14	R1:Column	Snow	0	0	4045.9	0
H:S1:D14	R1:Column	Wind (P)	0	0	-1022.4	0
H:S1:D14	R1:Column	Wind (S)	0	0	-1314	0
H:S1:D14	R2:Column	Dead	144	0	2356.3	0
H:S1:D14	R2:Column	DL (Self Wt)	144	0	128.5	0
H:S1:D14	R2:Column	Roof Live	144	0	2304.6	0
H:S1:D14	R2:Column	Snow	144	0	7377.7	0
H:S1:D14	R2:Column	Wind (P)	144	0	-1864.3	0
H:S1:D14	R2:Column	Wind (S)	144	0	-2396.1	0
H:S1:D15	R1:Column	Dead	0	0	3192.4	0
H:S1:D15	R1:Column	DL (Self Wt)	0	0	128.6	0
H:S1:D15	R1:Column	Roof Live	0	0	3122.3	0
H:S1:D15	R1:Column	Snow	0	0	9995.6	0
H:S1:D15	R1:Column	Wind (P)	0	0	-2525.9	0
H:S1:D15	R1:Column	Wind (S)	0	0	-3246.3	0
H:S1:D15	R2:Column	Dead	144	0	4104.5	0
H:S1:D15	R2:Column	DL (Self Wt)	144	0	128.6	0
H:S1:D15	R2:Column	Roof Live	144	0	4014.5	0
H:S1:D15	R2:Column	Snow	144	0	12851.6	0
H:S1:D15	R2:Column	Wind (P)	144	0	-3247.5	0

H:S1:D15	R2:Column	Wind (S)	144	0	-4173.9	0
H:S1:D5	R1:Column	Dead	0	0	1596.2	0
H:S1:D5	R1:Column	DL (Self Wt)	0	0	30.6	0
H:S1:D5	R1:Column	Roof Live	0	0	1561.2	0
H:S1:D5	R1:Column	Snow	0	0	4997.8	0
H:S1:D5	R1:Column	Wind (P)	0	0	-1263	0
H:S1:D5	R1:Column	Wind (S)	0	0	-1623.2	0
H:S1:D5	R2:Column	Dead	57	0	1596.2	0
H:S1:D5	R2:Column	DL (Self Wt)	57	0	30.6	0
H:S1:D5	R2:Column	Roof Live	57	0	1561.2	0
H:S1:D5	R2:Column	Snow	57	0	4997.8	0
H:S1:D5	R2:Column	Wind (P)	57	0	-1263	0
H:S1:D5	R2:Column	Wind (S)	57	0	-1623.2	0
H:S1:D6	R1:Column	DL (Self Wt)	0	0	27.5	0
H:S1:D6	R2:Column	DL (Self Wt)	51	0	27.5	0
H:S2:D12	R1:Column	Dead	0	0	1596.2	0
H:S2:D12	R1:Column	DL (Self Wt)	0	0	29.8	0
H:S2:D12	R1:Column	Roof Live	0	0	1561.2	0
H:S2:D12	R1:Column	Snow	0	0	4997.8	0
H:S2:D12	R1:Column	Wind (P)	0	0	-1263	0
H:S2:D12	R1:Column	Wind (S)	0	0	-1623.1	0
H:S2:D12	R2:Column	Dead	55.5	0	1596.2	0
H:S2:D12	R2:Column	DL (Self Wt)	55.5	0	29.8	0
H:S2:D12	R2:Column	Roof Live	55.5	0	1561.2	0
H:S2:D12	R2:Column	Snow	55.5	0	4997.8	0
H:S2:D12	R2:Column	Wind (P)	55.5	0	-1263	0
H:S2:D12	R2:Column	Wind (S)	55.5	0	-1623.2	0
H:S2:D16	R1:Column	Dead	0	0	4104.4	0
H:S2:D16	R1:Column	DL (Self Wt)	0	0	128.6	0
H:S2:D16	R1:Column	Roof Live	0	0	4014.4	0
H:S2:D16	R1:Column	Snow	0	0	12851.6	0
H:S2:D16	R1:Column	Wind (P)	0	0	-3247.5	0
H:S2:D16	R1:Column	Wind (S)	0	0	-4173.9	0
H:S2:D16	R2:Column	Dead	144	0	3192.3	0
H:S2:D16	R2:Column	DL (Self Wt)	144	0	128.6	0
H:S2:D16	R2:Column	Roof Live	144	0	3122.3	0
H:S2:D16	R2:Column	Snow	144	0	9995.6	0
H:S2:D16	R2:Column	Wind (P)	144	0	-2525.9	0
H:S2:D16	R2:Column	Wind (S)	144	0	-3246.3	0
H:S2:D17	R1:Column	Dead	0	0	2356.3	0
H:S2:D17	R1:Column	DL (Self Wt)	0	0	128.5	0
H:S2:D17	R1:Column	Roof Live	0	0	2304.6	0
H:S2:D17	R1:Column	Snow	0	0	7377.7	0

H:S2:D17	R1:Column	Wind (P)	0	0	-1864.3	0
H:S2:D17	R1:Column	Wind (S)	0	0	-2396.1	0
H:S2:D17	R2:Column	Dead	144	0	1292.1	0
H:S2:D17	R2:Column	DL (Self Wt)	144	0	128.6	0
H:S2:D17	R2:Column	Roof Live	144	0	1263.8	0
H:S2:D17	R2:Column	Snow	144	0	4045.9	0
H:S2:D17	R2:Column	Wind (P)	144	0	-1022.4	0
H:S2:D17	R2:Column	Wind (S)	144	0	-1314	0
PR1	R1:Truss	Dead	0	0	26.7	0
PR1	R1:Truss	Roof Live	0	0	133.3	0
PR1	R1:Truss	Snow	0	0	280	0
PR1	R1:Truss	Unb. Snow (WFL)	0	0	286.1	0
PR1	R1:Truss	Wind (P)	0	0	68.5	0
PR1	R1:Truss	Wind (S)	0	0	-227	0
PR1	R2:Truss	Dead	81.75	0	35.8	0
PR1	R2:Truss	Roof Live	81.75	0	179.2	0
PR1	R2:Truss	Snow	81.75	0	376.3	0
PR1	R2:Truss	Unb. Snow (WFL)	81.75	0	286.1	0
PR1	R2:Truss	Wind (P)	81.75	0	92.1	0
PR1	R2:Truss	Wind (S)	81.75	0	-305	0
PR1 UnbSnow	R1:Truss	Dead	0	0	21.1	0
PR1 UnbSnow	R1:Truss	Roof Live	0	0	105.5	0
PR1 UnbSnow	R1:Truss	Snow	0	0	346.2	0
PR1 UnbSnow	R1:Truss	Unb. Snow (WFL)	0	0	353.8	0
PR1 UnbSnow	R1:Truss	Wind (P)	0	0	54.3	0
PR1 UnbSnow	R1:Truss	Wind (S)	0	0	-179.7	0
PR1 UnbSnow	R2:Truss	Dead	81.75	0	28.4	0
PR1 UnbSnow	R2:Truss	Roof Live	81.75	0	141.8	0
PR1 UnbSnow	R2:Truss	Snow	81.75	0	465.2	0
PR1 UnbSnow	R2:Truss	Unb. Snow (WFL)	81.75	0	353.8	0
PR1 UnbSnow	R2:Truss	Wind (P)	81.75	0	72.9	0
PR1 UnbSnow	R2:Truss	Wind (S)	81.75	0	-241.6	0
PR2	R1:Truss	Dead	0	0	31	0
PR2	R1:Truss	Roof Live	0	0	155	0
PR2	R1:Truss	Snow	0	0	325.5	0

PR2	R1:Truss	Wind (P)	0	0	79.7	0
PR2	R1:Truss	Wind (S)	0	0	-263.9	0
PR2	R2:Truss	Dead	93	0	31	0
PR2	R2:Truss	Roof Live	93	0	155	0
PR2	R2:Truss	Snow	93	0	325.5	0
PR2	R2:Truss	Wind (P)	93	0	79.7	0
PR2	R2:Truss	Wind (S)	93	0	-263.9	0
S1:C1	R1:Footing	Dead	0	0	2115.1	0
S1:C1	R1:Footing	DL (Self Wt)	0	0	107.4	0
S1:C1	R1:Footing	Roof Live	0	0	2021.3	0
S1:C1	R1:Footing	Snow	0	0	6470.5	0
S1:C1	R1:Footing	Wind (E+)	0	-175.2	-1261.8	-641
S1:C1	R1:Footing	Wind (E-)	0	-408.6	-1360.4	-1494.6
S1:C1	R1:Footing	Wind (P)	0	437.3	-1261.8	1737
S1:C1	R1:Footing	Wind (S)	0	-365.8	-1534.4	-1475.5
S1:C1	R2:Diaph.	Wind (E+)	219.5	-105.2	0	0
S1:C1	R2:Diaph.	Wind (E-)	219.5	-245.2	0	0
S1:C1	R2:Diaph.	Wind (P)	219.5	247.3	0	0
S1:C1	R2:Diaph.	Wind (S)	219.5	-204.4	0	0
S1:C10	R1:Footing	Dead	0	0	483.6	0
S1:C10	R1:Footing	DL (Self Wt)	0	0	107.6	0
S1:C10	R1:Footing	Wind (E+)	0	-871.9	0	-3123
S1:C10	R1:Footing	Wind (P)	0	922.4	0	3439.8
S1:C10	R1:Footing	Wind (S)	0	-770	0	-2893.7
S1:C10	R2:Diaph.	Wind (E+)	219.5	-404.7	0	0
S1:C10	R2:Diaph.	Wind (P)	219.5	414.6	0	0
S1:C10	R2:Diaph.	Wind (S)	219.5	-343.8	0	0
S1:C12	R1:Footing	Dead	0	0	541.3	0
S1:C12	R1:Footing	DL (Self Wt)	0	0	107.6	0
S1:C12	R1:Footing	Wind (E+)	0	-952.9	0	-3406.4
S1:C12	R1:Footing	Wind (P)	0	1008.6	0	3758
S1:C12	R1:Footing	Wind (S)	0	-841.8	0	-3162
S1:C12	R2:Diaph.	Wind (E+)	219.5	-429.8	0	0
S1:C12	R2:Diaph.	Wind (P)	219.5	439.8	0	0
S1:C12	R2:Diaph.	Wind (S)	219.5	-364.6	0	0
S1:C16	R1:Footing	Dead	0	0	4003.6	0
S1:C16	R1:Footing	DL (Self Wt)	0	0	143.4	0
S1:C16	R1:Footing	Roof Live	0	0	3359.3	0
S1:C16	R1:Footing	Snow	0	0	10754.2	0
S1:C16	R1:Footing	Wind (E+)	0	-654.5	-3492.7	-2394.2
S1:C16	R1:Footing	Wind (P)	0	693.5	-2717.6	2654.6
S1:C16	R1:Footing	Wind (S)	0	-579	-3492.7	-2235.9
S1:C16	R2:Diaph.	Wind (E+)	219.5	-392.7	0	0
S1:C16	R2:Diaph.	Wind (P)	219.5	403.3	0	0
S1:C16	R2:Diaph.	Wind (S)	219.5	-334.6	0	0
S1:C17	R1:Footing	Dead	0	0	355.4	0
S1:C17	R1:Footing	DL (Self Wt)	0	0	107.6	0

S1:C17	R1:Footing	Wind (E+)	0	-408.6	0	-1494.8
S1:C17	R1:Footing	Wind (P)	0	432.2	0	1642.3
S1:C17	R1:Footing	Wind (S)	0	-360.7	0	-1380.9
S1:C17	R2:Diaph.	Wind (E+)	219.5	-245.2	0	0
S1:C17	R2:Diaph.	Wind (P)	219.5	252.6	0	0
S1:C17	R2:Diaph.	Wind (S)	219.5	-209.7	0	0
S1:C18 (Typ)	R1:Footing	Dead	0	0	1088	0
S1:C18 (Typ)	R1:Footing	DL (Self Wt)	0	0	107.4	0
S1:C18 (Typ)	R1:Footing	Roof Live	0	0	393.6	0
S1:C18 (Typ)	R1:Footing	Snow	0	0	1260	0
S1:C18 (Typ)	R1:Footing	Wind (S)	0	0	-298.8	0
S1:C2 (Typ)	R1:Footing	Dead	0	2.8	4560.9	-50.3
S1:C2 (Typ)	R1:Footing	DL (Self Wt)	0	0	149	0
S1:C2 (Typ)	R1:Footing	Roof Live	0	2.6	3568.4	-47.3
S1:C2 (Typ)	R1:Footing	Snow	0	8.4	11424	-151.5
S1:C2 (Typ)	R1:Footing	Unb. Snow (WFL)	0	8	10956.1	-143.6
S1:C2 (Typ)	R1:Footing	Wind (E+)	0	908.6	-3499.8	-3247.3
S1:C2 (Typ)	R1:Footing	Wind (E+)	0	-908.1	-2701.8	3239.3
S1:C2 (Typ)	R1:Footing	Wind (L Min)	0	-446.7	-448.4	1825.1
S1:C2 (Typ)	R1:Footing	Wind (L Min)	0	-446.7	448.4	1825.1
S1:C2 (Typ)	R1:Footing	Wind (L+)	0	-450.6	-3438	1868.6
S1:C2 (Typ)	R1:Footing	Wind (L+)	0	-806.6	-3071.2	3083.2
S1:C2 (Typ)	R1:Footing	Wind (L-)	0	-287.7	-1499	1228.9
S1:C2 (Typ)	R1:Footing	Wind (L-)	0	-969.5	-1865.6	3722.8
S1:C3	R1:Footing	Dead	0	0	1948.2	0
S1:C3	R1:Footing	DL (Self Wt)	0	0	211.4	0
S1:C3	R1:Footing	Roof Live	0	0	1561.2	0
S1:C3	R1:Footing	Snow	0	0	4997.8	0
S1:C3	R1:Footing	Wind (E+)	0	-405	0	-1481.4
S1:C3	R1:Footing	Wind (P)	0	464.9	-1263	2298.2
S1:C3	R1:Footing	Wind (S)	0	-394.1	-1623.2	-2039.2
S1:C3	R2:Diaph.	Wind (E+)	219.5	-243	0	0
S1:C3	R2:Diaph.	Wind (P)	219.5	213.7	0	0
S1:C3	R2:Diaph.	Wind (S)	219.5	-171.2	0	0
S1:C5	R1:Footing	Dead	0	0	1948.2	0
S1:C5	R1:Footing	DL (Self Wt)	0	0	211.4	0
S1:C5	R1:Footing	Roof Live	0	0	1561.2	0
S1:C5	R1:Footing	Snow	0	0	4997.8	0
S1:C5	R1:Footing	Wind (E+)	0	-405	0	-1481.4
S1:C5	R1:Footing	Wind (P)	0	459.4	-1263	2197.2
S1:C5	R1:Footing	Wind (S)	0	-388.6	-1623.2	-1938.1

S1:C5	R2:Diaph.	Wind (E+)	219.5	-243	0	0
S1:C5	R2:Diaph.	Wind (P)	219.5	219.2	0	0
S1:C5	R2:Diaph.	Wind (S)	219.5	-176.7	0	0
S1:C6	R1:Footing	Dead	0	0	2961.1	0
S1:C6	R1:Footing	DL (Self Wt)	0	0	143.4	0
S1:C6	R1:Footing	Roof Live	0	0	2453.3	0
S1:C6	R1:Footing	Snow	0	0	7853.7	0
S1:C6	R1:Footing	Wind (E+)	0	-520.6	-2550.7	-1904.6
S1:C6	R1:Footing	Wind (P)	0	555.4	-1984.6	2178.4
S1:C6	R1:Footing	Wind (S)	0	-464.3	-2550.7	-1845.2
S1:C6	R2:Diaph.	Wind (E+)	219.5	-312.4	0	0
S1:C6	R2:Diaph.	Wind (P)	219.5	317.2	0	0
S1:C6	R2:Diaph.	Wind (S)	219.5	-262.5	0	0
S1:C8	R1:Footing	Dead	0	0	4397.2	0
S1:C8	R1:Footing	DL (Self Wt)	0	0	143.4	0
S1:C8	R1:Footing	Roof Live	0	0	3568.4	0
S1:C8	R1:Footing	Snow	0	0	11423.6	0
S1:C8	R1:Footing	Wind (E+)	0	-1141.8	-3710.1	-4141.8
S1:C8	R1:Footing	Wind (P)	0	1208.9	-2886.7	4574.6
S1:C8	R1:Footing	Wind (S)	0	-1009.2	-3710.1	-3850.2
S1:C8	R2:Diaph.	Wind (E+)	219.5	-622.4	0	0
S1:C8	R2:Diaph.	Wind (P)	219.5	639.1	0	0
S1:C8	R2:Diaph.	Wind (S)	219.5	-530.2	0	0
S2:C10	R1:Footing	Dead	0	0	4397.2	0
S2:C10	R1:Footing	DL (Self Wt)	0	0	143.4	0
S2:C10	R1:Footing	Roof Live	0	0	3568.4	0
S2:C10	R1:Footing	Snow	0	0	11423.6	0
S2:C10	R1:Footing	Wind (E+)	0	-1141.8	-3710.1	-4141.8
S2:C10	R1:Footing	Wind (P)	0	1208.9	-2886.7	4574.6
S2:C10	R1:Footing	Wind (S)	0	-1009.2	-3710.1	-3850.2
S2:C10	R2:Diaph.	Wind (E+)	219.5	-622.4	0	0
S2:C10	R2:Diaph.	Wind (P)	219.5	639.1	0	0
S2:C10	R2:Diaph.	Wind (S)	219.5	-530.2	0	0
S2:C13	R1:Footing	Dead	0	0	352.2	0
S2:C13	R1:Footing	DL (Self Wt)	0	0	107.6	0
S2:C13	R1:Footing	Wind (E+)	0	-404.9	0	-1481.4
S2:C13	R1:Footing	Wind (P)	0	431.5	0	1687.4
S2:C13	R1:Footing	Wind (S)	0	-360.8	0	-1428.3
S2:C13	R2:Diaph.	Wind (E+)	219.5	-243	0	0
S2:C13	R2:Diaph.	Wind (P)	219.5	247.1	0	0
S2:C13	R2:Diaph.	Wind (S)	219.5	-204.6	0	0
S2:C15	R1:Footing	Dead	0	0	352.2	0
S2:C15	R1:Footing	DL (Self Wt)	0	0	107.6	0
S2:C15	R1:Footing	Wind (E+)	0	-404.9	0	-1481.4
S2:C15	R1:Footing	Wind (P)	0	432.7	0	1708.6
S2:C15	R1:Footing	Wind (S)	0	-361.9	0	-1449.5
S2:C15	R2:Diaph.	Wind (E+)	219.5	-243	0	0

S2:C15	R2:Diaph.	Wind (P)	219.5	245.9	0	0
S2:C15	R2:Diaph.	Wind (S)	219.5	-203.4	0	0
S2:C17	R1:Footing	Dead	0	0	2115.1	0
S2:C17	R1:Footing	DL (Self Wt)	0	0	107.4	0
S2:C17	R1:Footing	Roof Live	0	0	2021.3	0
S2:C17	R1:Footing	Snow	0	0	6470.5	0
S2:C17	R1:Footing	Wind (E+)	0	-175.2	-1261.8	-641
S2:C17	R1:Footing	Wind (E-)	0	-408.6	-1360.4	-1494.6
S2:C17	R1:Footing	Wind (P)	0	437.3	-1261.8	1737
S2:C17	R1:Footing	Wind (S)	0	-365.8	-1534.4	-1475.5
S2:C17	R2:Diaph.	Wind (E+)	219.5	-105.2	0	0
S2:C17	R2:Diaph.	Wind (E-)	219.5	-245.2	0	0
S2:C17	R2:Diaph.	Wind (P)	219.5	247.3	0	0
S2:C17	R2:Diaph.	Wind (S)	219.5	-204.4	0	0
T1	R1:Col/Hdr	Dead	5.125	0	3648.4	0
T1	R1:Col/Hdr	Roof Live	5.125	0	3568.4	0
T1	R1:Col/Hdr	Snow	5.125	0	11423.5	0
T1	R1:Col/Hdr	Unb. Snow (WFL)	5.125	0	6206.1	0
T1	R1:Col/Hdr	Unb. Snow (WFR)	5.125	0	10961.4	0
T1	R1:Col/Hdr	Wind (P)	5.125	0	-3710.1	0
T1	R1:Col/Hdr	Wind (S)	5.125	0	-2886.7	0
T1	R2:Col/Hdr	Dead	762.875	0	3648.4	0
T1	R2:Col/Hdr	Roof Live	762.875	0	3568.4	0
T1	R2:Col/Hdr	Snow	762.875	0	11423.6	0
T1	R2:Col/Hdr	Unb. Snow (WFL)	762.875	0	10961.5	0
T1	R2:Col/Hdr	Unb. Snow (WFR)	762.875	0	6206.1	0
T1	R2:Col/Hdr	Wind (P)	762.875	0	-2886.7	0
T1	R2:Col/Hdr	Wind (S)	762.875	0	-3710.1	0
VS:E1:D13	R1:Roof	Wind (P)	105	0	312.9	0
VS:E1:D13	R1:Roof	Wind (S)	105	0	-340.1	0
VS:E1:D13	R3:Ceiling	Wind (P)	4	0	338.7	0
VS:E1:D13	R3:Ceiling	Wind (S)	4	0	-368.3	0
WH:S1:C10	R1:Column	Wind (E+)	0	-178.7	0	0
WH:S1:C10	R1:Column	Wind (P)	0	183.1	0	0
WH:S1:C10	R1:Column	Wind (S)	0	-151.8	0	0
WH:S1:C10	R2:Column	Wind (E+)	90	-226	0	0
WH:S1:C10	R2:Column	Wind (P)	90	231.5	0	0
WH:S1:C10	R2:Column	Wind (S)	90	-192	0	0
WH:S1:C12	R1:Column	Wind (E+)	0	-154	0	0
WH:S1:C12	R1:Column	Wind (P)	0	157.6	0	0
WH:S1:C12	R1:Column	Wind (S)	0	-130.6	0	0
WH:S1:C12	R2:Column	Wind (E+)	90	-275.8	0	0
WH:S1:C12	R2:Column	Wind (P)	90	282.2	0	0

WH:S1:C12	R2:Column	Wind (S)	90	-234	0	0
WH:S1:C15	R1:Column	Wind (E+)	0	-340.6	0	0
WH:S1:C15	R1:Column	Wind (P)	0	349	0	0
WH:S1:C15	R1:Column	Wind (S)	0	-289.4	0	0
WH:S1:C15	R2:Column	Wind (E+)	90	-64.1	0	0
WH:S1:C15	R2:Column	Wind (P)	90	65.6	0	0
WH:S1:C15	R2:Column	Wind (S)	90	-54.4	0	0
WH:S1:C17	R1:Column	Wind (E+)	0	-70.4	0	0
WH:S1:C17	R1:Column	Wind (P)	0	72.5	0	0
WH:S1:C17	R1:Column	Wind (S)	0	-60.2	0	0
WH:S1:C17	R2:Column	Wind (E+)	75.75	-174.8	0	0
WH:S1:C17	R2:Column	Wind (P)	75.75	180.1	0	0
WH:S1:C17	R2:Column	Wind (S)	75.75	-149.5	0	0
WH:S1:C3	R1:Column	Wind (E+)	0	-84.1	0	0
WH:S1:C3	R1:Column	Wind (P)	0	74	0	0
WH:S1:C3	R1:Column	Wind (S)	0	-59.3	0	0
WH:S1:C3	R2:Column	Wind (E+)	78	-158.9	0	0
WH:S1:C3	R2:Column	Wind (P)	78	139.7	0	0
WH:S1:C3	R2:Column	Wind (S)	78	-111.9	0	0
WH:S1:C5	R1:Column	Wind (E+)	0	-158.9	0	0
WH:S1:C5	R1:Column	Wind (P)	0	143.3	0	0
WH:S1:C5	R1:Column	Wind (S)	0	-115.5	0	0
WH:S1:C5	R2:Column	Wind (E+)	78	-84.1	0	0
WH:S1:C5	R2:Column	Wind (P)	78	75.9	0	0
WH:S1:C5	R2:Column	Wind (S)	78	-61.2	0	0
WH:S2:C13	R1:Column	Wind (E+)	0	-84.1	0	0
WH:S2:C13	R1:Column	Wind (P)	0	85.5	0	0
WH:S2:C13	R1:Column	Wind (S)	0	-70.8	0	0
WH:S2:C13	R2:Column	Wind (E+)	78	-158.9	0	0
WH:S2:C13	R2:Column	Wind (P)	78	161.6	0	0
WH:S2:C13	R2:Column	Wind (S)	78	-133.8	0	0
WH:S2:C15	R1:Column	Wind (E+)	0	-158.9	0	0
WH:S2:C15	R1:Column	Wind (P)	0	160.8	0	0
WH:S2:C15	R1:Column	Wind (S)	0	-133	0	0
WH:S2:C15	R2:Column	Wind (E+)	78	-84.1	0	0
WH:S2:C15	R2:Column	Wind (P)	78	85.1	0	0
WH:S2:C15	R2:Column	Wind (S)	78	-70.4	0	0
WH:S2:C3	R1:Column	Wind (E+)	0	-68.1	0	0
WH:S2:C3	R1:Column	Wind (P)	0	69.6	0	0
WH:S2:C3	R1:Column	Wind (S)	0	-57.7	0	0
WH:S2:C3	R2:Column	Wind (E+)	90	-361.7	0	0
WH:S2:C3	R2:Column	Wind (P)	90	370.2	0	0
WH:S2:C3	R2:Column	Wind (S)	90	-306.9	0	0
WH:S2:C6	R1:Column	Wind (E+)	0	-259.7	0	0
WH:S2:C6	R1:Column	Wind (P)	0	266	0	0
WH:S2:C6	R1:Column	Wind (S)	0	-220.6	0	0
WH:S2:C6	R2:Column	Wind (E+)	90	-145	0	0
WH:S2:C6	R2:Column	Wind (P)	90	148.6	0	0

WH:S2:C6	R2:Column	Wind (S)	90	-123.2	0	0
WH:S2:C8	R1:Column	Wind (E+)	0	-240	0	0
WH:S2:C8	R1:Column	Wind (P)	0	245.6	0	0
WH:S2:C8	R1:Column	Wind (S)	0	-203.6	0	0
WH:S2:C8	R2:Column	Wind (E+)	90	-189.8	0	0
WH:S2:C8	R2:Column	Wind (P)	90	194.2	0	0
WH:S2:C8	R2:Column	Wind (S)	90	-161	0	0

Combined Reactions

Member ID	Reaction Member ID	Load Combination	Maximum Horizontal Reaction (lb)	Maximum Vertical Reaction (lb)	Maximum Moment Reaction (ft lb)	Connection Type
CJ1	R1:Truss BC	D	0	155	0	
CJ1	R2:Truss BC	D	0	155	0	
E2:C2	R1:Footing	.6D+Wp	848.3	686.3	2975.5	
E2:C2	R1:Footing	.6D+Ws	-919.2	447	-3206.2	
E2:C2	R1:Footing	D+S	0	3366.8	0	
E2:C2	R2:Diaph.	.6D+Wp	-368.1	0	0	
E2:C2	R2:Diaph.	.6D+Ws	409.3	0	0	
E2:C2	R3:Diaph.	.6D+Wp	1251.4	0	0	
E2:C2	R3:Diaph.	.6D+Ws	-1372.3	0	0	
E2:C3	R1:Footing	.6D+Wp	856	766.5	3054.8	
E2:C3	R1:Footing	.6D+Ws	-926.8	527.2	-3284.9	
E2:C3	R1:Footing	D+S	0	3491.6	0	
E2:C3	R2:Diaph.	.6D+Wp	-42.4	0	0	
E2:C3	R2:Diaph.	.6D+Ws	52.1	0	0	
E2:C3	R3:Diaph.	.6D+Wp	1106.7	0	0	
E2:C3	R3:Diaph.	.6D+Ws	-1212.5	0	0	
E2:C4	R1:Footing	.6D+Wp	899.2	884.9	3200.4	
E2:C4	R1:Footing	.6D+Ws	-973.6	632.3	-3439.8	
E2:C4	R1:Footing	D+S	0	3808	0	
E2:C4	R2:Diaph.	.6D+Wp	129.5	0	0	
E2:C4	R2:Diaph.	.6D+Ws	-136.5	0	0	
E2:C4	R3:Diaph.	.6D+Wp	1197.1	0	0	
E2:C4	R3:Diaph.	.6D+Ws	-1309.5	0	0	
EP1:C2	R1:Footing	.6D+Wp	478.1	684.4	1952.2	
EP1:C2	R1:Footing	.6D+Ws	-478.1	430.1	-1952.2	
EP1:C2	R1:Footing	D+S	0	3507.4	0	
EP1:C2	R2:Diaph.	.6D+Wp	59.7	0	0	
EP1:C2	R2:Diaph.	.6D+Ws	-59.7	0	0	
EP1:C2	R3:Diaph.	.6D+Wp	182.1	0	0	
EP1:C2	R3:Diaph.	.6D+Ws	-182.1	0	0	
EP1:C3	R1:Footing	.6D+Wp	477.7	749	2006.6	
EP1:C3	R1:Footing	.6D+Ws	-477.7	494.7	-2006.6	
EP1:C3	R1:Footing	D+S	0	3607.2	0	
EP1:C3	R2:Diaph.	.6D+Wp	22.9	0	0	
EP1:C3	R2:Diaph.	.6D+Ws	-22.9	0	0	
EP1:C3	R3:Diaph.	.6D+Wp	219.4	0	0	
EP1:C3	R3:Diaph.	.6D+Ws	-219.4	0	0	

EP1:C4	R1:Footing	.6D+Wp	477.1	813.4	2035.2	
EP1:C4	R1:Footing	.6D+Ws	-477.1	559.1	-2035.2	
EP1:C4	R1:Footing	D+S	0	3706.8	0	
EP1:C4	R2:Diaph.	.6D+Wp	10.5	0	0	
EP1:C4	R2:Diaph.	.6D+Ws	-10.5	0	0	
EP1:C4	R3:Diaph.	.6D+Wp	232.4	0	0	
EP1:C4	R3:Diaph.	.6D+Ws	-232.4	0	0	
EP1:C5	R1:Footing	.6D+Wp	475.2	878	2036.5	
EP1:C5	R1:Footing	.6D+Ws	-475.2	623.7	-2036.5	
EP1:C5	R1:Footing	D+S	0	3806.6	0	
EP1:C5	R2:Diaph.	.6D+Wp	4.2	0	0	
EP1:C5	R2:Diaph.	.6D+Ws	-4.2	0	0	
EP1:C5	R3:Diaph.	.6D+Wp	240.6	0	0	
EP1:C5	R3:Diaph.	.6D+Ws	-240.6	0	0	
GL1	R1:Column	.6D+Wp	71.2	0	0	
GL1	R2:Column	.6D+Wp	71.2	0	0	
GP1	R1:Column	.6D+Wp	25	0	0	
GP1	R2:Column	.6D+Wp	25	0	0	
GW1	R1:Column	.6D+Wp	-218.6	0	0	
GW1	R2:Column	.6D+Wp	-218.6	0	0	
GW4	R1:Column	.6D+Wp	-249.4	0	0	
GW4	R2:Column	.6D+Wp	-249.4	0	0	
H:S1:D14	R1:Column	.6D+Ws	0	-410.1	0	
H:S1:D14	R1:Column	D+S	0	5466.6	0	
H:S1:D14	R2:Column	.6D+Ws	0	-853.8	0	
H:S1:D14	R2:Column	D+S	0	9862.5	0	
H:S1:D15	R1:Column	.6D+Ws	0	-1202.3	0	
H:S1:D15	R1:Column	D+S	0	13316.6	0	
H:S1:D15	R2:Column	.6D+Ws	0	-1582.6	0	
H:S1:D15	R2:Column	D+S	0	17084.7	0	
H:S1:D5	R1:Column	.6D+Ws	0	-634.9	0	
H:S1:D5	R1:Column	D+S	0	6624.6	0	
H:S1:D5	R2:Column	.6D+Ws	0	-634.9	0	
H:S1:D5	R2:Column	D+S	0	6624.6	0	
H:S1:D6	R1:Column	D	0	27.5	0	
H:S1:D6	R2:Column	D	0	27.5	0	
H:S2:D12	R1:Column	.6D+Ws	0	-635.6	0	
H:S2:D12	R1:Column	D+S	0	6623.8	0	
H:S2:D12	R2:Column	.6D+Ws	0	-635.7	0	
H:S2:D12	R2:Column	D+S	0	6623.8	0	
H:S2:D16	R1:Column	.6D+Ws	0	-1582.7	0	
H:S2:D16	R1:Column	D+S	0	17084.6	0	
H:S2:D16	R2:Column	.6D+Ws	0	-1202.3	0	
H:S2:D16	R2:Column	D+S	0	13316.5	0	

H:S2:D17	R1:Column	.6D+Ws	0	-853.8	0	
H:S2:D17	R1:Column	D+S	0	9862.5	0	
H:S2:D17	R2:Column	.6D+Ws	0	-410.1	0	
H:S2:D17	R2:Column	D+S	0	5466.6	0	
PR1	R1:Truss	.6D+Ws	0	-211	0	
PR1	R1:Truss	D+S(UL)	0	312.8	0	
PR1	R2:Truss	.6D+Ws	0	-283.5	0	
PR1	R2:Truss	D+S	0	412.1	0	
PR1 UnbSnow	R1:Truss	.6D+Ws	0	-167	0	
PR1 UnbSnow	R1:Truss	D+S(UL)	0	374.9	0	
PR1 UnbSnow	R2:Truss	.6D+Ws	0	-224.6	0	
PR1 UnbSnow	R2:Truss	D+S	0	493.6	0	
PR2	R1:Truss	.6D+Ws	0	-245.3	0	
PR2	R1:Truss	D+S	0	356.5	0	
PR2	R2:Truss	.6D+Ws	0	-245.3	0	
PR2	R2:Truss	D+S	0	356.5	0	
S1:C1	R1:Footing	.6D+W(E-)	-408.6	16.1	-1494.6	
S1:C1	R1:Footing	.6D+Wp	437.3	114.7	1737	
S1:C1	R1:Footing	.6D+Ws	-365.8	-157.9	-1475.5	
S1:C1	R1:Footing	D+S	0	8693	0	
S1:C1	R2:Diaph.	.6D+W(E-)	-245.2	0	0	
S1:C1	R2:Diaph.	.6D+Wp	247.3	0	0	
S1:C10	R1:Footing	.6D+W(E+)	-871.9	397.8	-3123	
S1:C10	R1:Footing	.6D+Wp	922.4	397.8	3439.8	
S1:C10	R1:Footing	D	0	591.2	0	
S1:C10	R2:Diaph.	.6D+W(E+)	-404.7	0	0	
S1:C10	R2:Diaph.	.6D+Wp	414.6	0	0	
S1:C12	R1:Footing	.6D+W(E+)	-952.9	432.4	-3406.4	
S1:C12	R1:Footing	.6D+Wp	1008.6	432.4	3758	
S1:C12	R1:Footing	D	0	648.9	0	
S1:C12	R2:Diaph.	.6D+W(E+)	-429.8	0	0	
S1:C12	R2:Diaph.	.6D+Wp	439.8	0	0	
S1:C16	R1:Footing	.6D+W(E+)	-654.5	-947.1	-2394.2	
S1:C16	R1:Footing	.6D+Wp	693.5	-172	2654.6	
S1:C16	R1:Footing	.6D+Ws	-579	-947.1	-2235.9	
S1:C16	R1:Footing	D+S	0	14901.2	0	
S1:C16	R2:Diaph.	.6D+W(E+)	-392.7	0	0	
S1:C16	R2:Diaph.	.6D+Wp	403.3	0	0	
S1:C17	R1:Footing	.6D+W(E+)	-408.6	320.8	-1494.8	
S1:C17	R1:Footing	.6D+Wp	432.2	320.8	1642.4	
S1:C17	R1:Footing	D	0	463	0	
S1:C17	R2:Diaph.	.6D+W(E+)	-245.2	0	0	
S1:C17	R2:Diaph.	.6D+Wp	252.6	0	0	

S1:C18 (Typ)	R1:Footing	D+S	0	2455.4	0	
S1:C2 (Typ)	R1:Footing	.6D+W(E+)	910.3	-614.3	-3277.5	
S1:C2 (Typ)	R1:Footing	.6D+W(L-)	-967.8	1019.9	3692.7	
S1:C2 (Typ)	R1:Footing	D+S	11.2	16133.9	-201.8	
S1:C3	R1:Footing	.6D+W(E+)	-405	1380.3	-1481.4	
S1:C3	R1:Footing	.6D+Wp	464.9	117.3	2298.2	
S1:C3	R1:Footing	.6D+Ws	-394.1	-242.9	-2039.2	
S1:C3	R1:Footing	D+S	0	7157.4	0	
S1:C3	R2:Diaph.	.6D+W(E+)	-243	0	0	
S1:C3	R2:Diaph.	.6D+Wp	213.7	0	0	
S1:C5	R1:Footing	.6D+W(E+)	-405	1380.3	-1481.4	
S1:C5	R1:Footing	.6D+Wp	459.4	117.3	2197.2	
S1:C5	R1:Footing	.6D+Ws	-388.6	-242.9	-1938.1	
S1:C5	R1:Footing	D+S	0	7157.4	0	
S1:C5	R2:Diaph.	.6D+W(E+)	-243	0	0	
S1:C5	R2:Diaph.	.6D+Wp	219.2	0	0	
S1:C6	R1:Footing	.6D+W(E+)	-520.6	-630.6	-1904.6	
S1:C6	R1:Footing	.6D+Wp	555.4	-64.5	2178.4	
S1:C6	R1:Footing	.6D+Ws	-464.3	-630.6	-1845.2	
S1:C6	R1:Footing	D+S	0	10958.2	0	
S1:C6	R2:Diaph.	.6D+W(E+)	-312.4	0	0	
S1:C6	R2:Diaph.	.6D+Wp	317.2	0	0	
S1:C8	R1:Footing	.6D+W(E+)	-1141.8	-928.4	-4141.8	
S1:C8	R1:Footing	.6D+Wp	1208.9	-105	4574.6	
S1:C8	R1:Footing	.6D+Ws	-1009.2	-928.4	-3850.2	
S1:C8	R1:Footing	D+S	0	15964.2	0	
S1:C8	R2:Diaph.	.6D+W(E+)	-622.4	0	0	
S1:C8	R2:Diaph.	.6D+Wp	639.1	0	0	
S2:C10	R1:Footing	.6D+W(E+)	-1141.8	-928.4	-4141.8	
S2:C10	R1:Footing	.6D+Wp	1208.9	-105	4574.6	
S2:C10	R1:Footing	.6D+Ws	-1009.2	-928.4	-3850.2	
S2:C10	R1:Footing	D+S	0	15964.2	0	
S2:C10	R2:Diaph.	.6D+W(E+)	-622.4	0	0	
S2:C10	R2:Diaph.	.6D+Wp	639.1	0	0	
S2:C13	R1:Footing	.6D+W(E+)	-404.9	318.9	-1481.4	
S2:C13	R1:Footing	.6D+Wp	431.5	318.9	1687.4	
S2:C13	R1:Footing	D	0	459.8	0	
S2:C13	R2:Diaph.	.6D+W(E+)	-243	0	0	
S2:C13	R2:Diaph.	.6D+Wp	247.1	0	0	
S2:C15	R1:Footing	.6D+W(E+)	-404.9	318.9	-1481.4	
S2:C15	R1:Footing	.6D+Wp	432.7	318.9	1708.6	
S2:C15	R1:Footing	D	0	459.8	0	
S2:C15	R2:Diaph.	.6D+W(E+)	-243	0	0	
S2:C15	R2:Diaph.	.6D+Wp	245.9	0	0	
S2:C17	R1:Footing	.6D+W(E-)	-408.6	16.1	-1494.6	
S2:C17	R1:Footing	.6D+Wp	437.3	114.7	1737	
S2:C17	R1:Footing	.6D+Ws	-365.8	-157.9	-1475.5	

S2:C17	R1:Footing	D+S	0	8693	0	
S2:C17	R2:Diaph.	.6D+W(E-)	-245.2	0	0	
S2:C17	R2:Diaph.	.6D+Wp	247.3	0	0	
T1	R1:Col/Hdr	.6D+Wp	0	-1521.1	0	
T1	R1:Col/Hdr	D+S	0	15071.9	0	
T1	R2:Col/Hdr	.6D+Ws	0	-1521.1	0	
T1	R2:Col/Hdr	D+S	0	15072	0	
VS:E1:D13	R1:Roof	.6D+Wp	0	312.9	0	
VS:E1:D13	R1:Roof	.6D+Ws	0	-340.1	0	
VS:E1:D13	R3:Ceiling	.6D+Wp	0	338.7	0	
VS:E1:D13	R3:Ceiling	.6D+Ws	0	-368.3	0	
WH:S1:C10	R1:Column	.6D+W(E+)	-178.7	0	0	
WH:S1:C10	R1:Column	.6D+Wp	183.1	0	0	
WH:S1:C10	R2:Column	.6D+W(E+)	-226	0	0	
WH:S1:C10	R2:Column	.6D+Wp	231.5	0	0	
WH:S1:C12	R1:Column	.6D+W(E+)	-154	0	0	
WH:S1:C12	R1:Column	.6D+Wp	157.6	0	0	
WH:S1:C12	R2:Column	.6D+W(E+)	-275.8	0	0	
WH:S1:C12	R2:Column	.6D+Wp	282.2	0	0	
WH:S1:C15	R1:Column	.6D+W(E+)	-340.6	0	0	
WH:S1:C15	R1:Column	.6D+Wp	349	0	0	
WH:S1:C15	R2:Column	.6D+W(E+)	-64.1	0	0	
WH:S1:C15	R2:Column	.6D+Wp	65.6	0	0	
WH:S1:C17	R1:Column	.6D+W(E+)	-70.4	0	0	
WH:S1:C17	R1:Column	.6D+Wp	72.5	0	0	
WH:S1:C17	R2:Column	.6D+W(E+)	-174.8	0	0	
WH:S1:C17	R2:Column	.6D+Wp	180.1	0	0	
WH:S1:C3	R1:Column	.6D+W(E+)	-84.1	0	0	
WH:S1:C3	R1:Column	.6D+Wp	74	0	0	
WH:S1:C3	R2:Column	.6D+W(E+)	-158.9	0	0	
WH:S1:C3	R2:Column	.6D+Wp	139.7	0	0	
WH:S1:C5	R1:Column	.6D+W(E+)	-158.9	0	0	
WH:S1:C5	R1:Column	.6D+Wp	143.3	0	0	
WH:S1:C5	R2:Column	.6D+W(E+)	-84.1	0	0	
WH:S1:C5	R2:Column	.6D+Wp	75.9	0	0	
WH:S2:C13	R1:Column	.6D+W(E+)	-84.1	0	0	
WH:S2:C13	R1:Column	.6D+Wp	85.5	0	0	
WH:S2:C13	R2:Column	.6D+W(E+)	-158.9	0	0	
WH:S2:C13	R2:Column	.6D+Wp	161.6	0	0	
WH:S2:C15	R1:Column	.6D+W(E+)	-158.9	0	0	
WH:S2:C15	R1:Column	.6D+Wp	160.8	0	0	
WH:S2:C15	R2:Column	.6D+W(E+)	-84.1	0	0	
WH:S2:C15	R2:Column	.6D+Wp	85.1	0	0	
WH:S2:C3	R1:Column	.6D+W(E+)	-68.1	0	0	
WH:S2:C3	R1:Column	.6D+Wp	69.6	0	0	

WH:S2:C3	R2:Column	.6D+W(E+)	-361.7	0	0	
WH:S2:C3	R2:Column	.6D+Wp	370.2	0	0	
WH:S2:C6	R1:Column	.6D+W(E+)	-259.7	0	0	
WH:S2:C6	R1:Column	.6D+Wp	266	0	0	
WH:S2:C6	R2:Column	.6D+W(E+)	-145	0	0	
WH:S2:C6	R2:Column	.6D+Wp	148.6	0	0	
WH:S2:C8	R1:Column	.6D+W(E+)	-240	0	0	
WH:S2:C8	R1:Column	.6D+Wp	245.6	0	0	
WH:S2:C8	R2:Column	.6D+W(E+)	-189.8	0	0	
WH:S2:C8	R2:Column	.6D+Wp	194.2	0	0	

Messages	
Category	**Description**
OOB Internal	At Opening D14: Column S1:C10 Embedment Depth was increased to 57 in. to match Embedment Depth of Column S1:C8.
OOB Internal	At Opening D15: Column S1:C15 Embedment Depth was increased to 57 in. to match Embedment Depth of Column S1:C12.
OOB Internal	At Opening D16: Column S2:C6 Embedment Depth was increased to 57 in. to match Embedment Depth of Column S2:C3.
OOB Internal	Column S1:C16 Embedment Depth was increased to 54 in. to match Embedment Depth of similar columns on S1.
OOB Internal	Column S1:C6 Embedment Depth was increased to 54 in. to match Embedment Depth of similar columns on S1.
OOB Internal	Column S2:C12 Embedment Depth was increased to 54 in. to match Embedment Depth of similar columns on S2.
OOB Internal	Columns S1:C10 and S1:C12 were identical except for Lumber. The Composite Column for S1:C10 was replaced with S1:C12 to consolidate materials. The design case for S1:C10 will still reflect the old lumber.
OOB Internal	Structural Header Section Consolidation has been applied to this Building. Header: H:S1:D6 to Material: 5-Ply 2x8 DFL/SYP M-23/2400 MSR 1.8E (1765)
OOB Internal	Structural Header Section Consolidation has been applied to this Building. Headers: H:S1:D14, H:S2:D17 to Material: 3-Ply 1-3/4x16 SYP 3100F-2.0E Max-Lam LVL (2423)
OOB Internal	The following Wall, Liner and/or Partition Girt design cases were not used in the Detailed Building - GW2,GW3.
OOB Internal	The jamb column at the Left side of opening E1:D13 could not be found to determine if extra trims are needed. The EST will need to confirm the trims needed at the edge of the opening.
OOB Internal	The jamb column at the Right side of opening E1:D13 could not be found to determine if extra trims are needed. The EST will need to confirm the trims needed at the edge of the opening.
OOB Internal	The quantity of part number 085122-108 has been adjusted to meet an order increment of 5. A quantity of 1 has been added to each row in the bill of material.
OOB Internal	The quantity of part number 085125-108 has been adjusted to meet an order increment of 5. A quantity of 1.5 has been added to each row in the bill of material.
OOB User	Any Opening: One or more openings that are Furnished By Others (FBO) have been added. Dealer must ensure that the opening size, framing, and flashing meet the requirements of the door or window being provided.
OOB User	Ceiling Finish and/or Sheathing Material is FBO - Design Ceiling Dead Load is 10 psf. Ceiling Unit Weight is assumed to be 1 psf. Please Verify.
OOB User	DESIGN OPTION: Building Enclosure changes from Partially Enclosed to Enclosed when Clear Openings are ignored.
OOB User	Insulation Thickness has been increased for Walls E2L,S1L,S2L since selected Insulation was not thick enough to fill the wall cavity.
OOB User	Min. Code Wind Speed must be verified with Local Authorities. Refer to ASCE Hazard Tool Website for ASCE 7-16 Risk Cat. II.
OOB User	Min. Code Wind Speed must be verified with Local Authorities. Refer to ATC Hazards Website for

Messages	
	ASCE 7-16 Risk Cat. II.
OOB User	NON-STANDARD DESIGN OPTION IS IN USE: Building Enclosure classification for Wind Load is overridden to ENCLOSED.
OOB User	NON-STANDARD DESIGN OPTION IS IN USE: Clear Openings on Walls E1 are ignored for Building Enclosure calculation.
OOB User	NON-STANDARD DESIGN OPTION IS IN USE: User is NOT forced to return to Inputs on Selected Conflict Resolution items.
OOB User	Opening D17 (Left) is located Snap-to-Column but is not adjacent to a truss-bearing column. Column placement or configuration may be incorrect. Edit opening location and/or alignment option if necessary.
OOB User	Openings 1,3,9,14-17: Horizontal location is violating the Alignment or MeasureTo property. Reset the opening location or change to Location Critical.
OOB User	Openings 7,10: Openings of the same model exist with different feature choices. Switch to "Feature" mode to review the differences.
OOB User	Openings D14 (Right), D15 (Left), D16 (Right), D17 (Left) are located Snap-to-Column but are not adjacent to truss-bearing columns. Column placement or configuration may be incorrect. Edit opening location and/or alignment option if necessary.
OOB User	Openings D14 (Right), D17 (Left) are located Snap-to-Column but are not adjacent to truss-bearing columns. Column placement or configuration may be incorrect. Edit opening location and/or alignment option if necessary.
OOB User	Pricebook QP042326 was not found. The project has been loaded with the default pricebook instead: QP072326
OOB User	Roof metal will be spliced with a thermal expansion joint due to roof run exceeding the single sheet maximum length of 34'-0"
OOB User	S1:C16: Footing Design Size of 31 in. exceeds largest available auger size of 24 inch.
OOB User	S1:C6: Footing Design Size of 26 in. exceeds largest available auger size of 24 inch.
OOB User	S1:C8: Footing Design Size of 32 in. exceeds largest available auger size of 24 inch.
OOB User	S2:C10: Footing Design Size of 32 in. exceeds largest available auger size of 24 inch.
OOB User	Some openings were moved by more than 1/4 the opening width in the column location adjustment process. Please review definitions of these openings in the Opening Wizard or consult a Quote Technician. Openings: 9
OOB User	Some stacked openings were ignored in the column location adjustment process. These openings may interfere with building framing. Please adjust the locations of these openings in the Opening Wizard or consult a Quote Technician. Openings: 4, 6
OOB User	SW Column: Footing Design Size of 32 in. exceeds largest available auger size of 24 inch.
OOB User	There are multiple finish patterns assigned to the faces of the partitions.
OOB User	There are multiple liner patterns assigned to the ceiling segments between partitions.
OOB User	There are multiple liner patterns assigned to the wall perimeter segments between partitions.
OOB User	Wall framing around stacked Openings may not be correct. Please review and add or remove lumber as required for columns, girts and framing. Consult with Lester Quote Technician.
OOB User	You have priced Overhead Door Openings Furnished By Others. It is recommended you supply doors that match the wind rating of your building. Openings: 14, 15, 16, 17
OOB User	You have selected a ceiling with finish furnished by others. Ensure the Truss Bottom Chord Load (Roof Loads tab of Design dialog) and the Bottom Chord Brace Preferences (Roof Framing tab of Bldg Options) are set according to the finish that will be used.

Office Design Report

Project: N84C-15142-03-08		Sep 4, 2026
Description: ENGR Only - 2,000 PSF Soil		
Customer: The John Raymond Co, LLC	**Market:** COMMERCIAL	
County: Ohio	**Plant:** 103	**Version:** 1.50.344
State: WV	**Price File:** QP052826	**BOM Version:** 344

Note: The information presented in this report is based on a preliminary design using the input data provided. Actual building component types, grades and dimensions are subject to change per Lester Engineering design review. The final design will meet the loads specified below. Lester's Structural Warranty reflects these loads.

Building Information

Building Unit: 1	**Description:** Main Building	**Type:** Uni-Frame Embedded
Width: 50'-6"	**Clear Height:** 14'-0" (Bldg. Def.)	**Top Chord Slope:** 3 / 12 **Btm Chord Slope:** 0 / 12
Length: 80'-6"	**Eave Height:** 15'-0"	**Roof System:** Simple Gable

Truss Plies:	2	**Heel Height:**	12"

SW Bay Spacing: 1@ 10'-1", 1@ 10'-0 1/2", 1@ 10'-1", 1@ 10'-0 1/2", 1@ 10'-1", 2@ 10'-0 1/2", 1@ 10'-1"

EW1 Bay Spacing: 2@ 10'-0", 1@ 10'-6", 2@ 10'-0"

EW2 Bay Spacing: 2@ 10'-0", 1@ 10'-6", 2@ 10'-0"

Overhangs (in):	**S1** = 12	**S2** = 12	**E1** = 0	**E2** = 0

Diaphragm/Knee Braces: Use Diaphragm WITHOUT Knee Braces.	**Liner:** Yes	**Ceiling:** Yes

Foundations

Foundation Type: Poured Footing, floor	**Wall Width (in):** N/A for Embedded Building
Frost Depth (in): 24	**Grade to Top of Wall (in):** N/A
Floor Thickness (in): 4	**Curb Height (in):** N/A
Anchor Type: Concrete Base Collar	**Soil Allowable Bearing Pressure (psf):** 2000
Concrete Strength (psi): 3000	**Soil Allowable Lateral Pressure (psf per ft depth):** 200

Building Loads - Wind

Building Code: IBC-2021	**Risk Category:** II - General Use
Code Wind Type: Ultimate	**Wind Exposure:** C
Code Minimum Ultimate Wind Speed (mph): 115	**Building Enclosure for Wind:** Enclosed
Equivalent Allowable Wind Speed (mph): 90.9	**Wind Importance Factor:** NA
Design Ultimate Wind Speed (mph): 115	**Estimated MRI Ultimate Wind (yr):** 900
Equivalent Allowable Wind Speed (mph): 90.9	
Warranted Wind Speed (mph): 90.9	

Building Loads - Snow

Building Code: IBC-2021	**Code Minimum Ground Snow Load (psf):** 20
Design Ground Snow Load (psf): 23.8	**Snow Importance Factor:** 1
Design Uniform Roof SL (psf): 20	**Estimated MRI Ultimate Snow (yr):** 380
Snow Retention Trim Over S1: No	**Snow Retention Trim Over S2:** No
Pg = 23.8 psf = Ps / (0.7 x Ce x Ct x I x Cs) = 16.8 / (0.7 x 1 x 1.2 x 1 x 1)	

Building Loads - Gravity	
Roof Live Load (psf): 25	Truss Bottom Chord Load (psf): 15
Roof Dead Load (psf): 15	Design Bottom Chord Braces for Ceiling Load: Yes
	Wall Dead Load (psf): 6

Wall Loads – Wind Load	
Side Wall Pressure (psf): 10.03	Side Wall Suction (psf): -9.57
End Wall Pressure (psf): 8.81	End Wall Suction (psf): -9.57
Components and Cladding (psf): -18.08	

Roof Loads – Unbalanced Snow Load, Wind Load, Actual Dead Load		
Unbalanced Snow Load	Wind Load (Perpendicular To Ridge)	Wind Load (Parallel To Ridge)
Windward (psf): 6	Windward (psf): -13.22	Windward (psf): -13.22
Leeward (psf): 20	Leeward (psf): -9.42	Leeward (psf): -8.35
Lee Surcharge (psf): 13.2	Components and Cladding (psf): 25.82	
Lee Surcharge Length(ft): 8.21	Actual Roof + Ceiling Dead Load (psf): 8.36	

Columns and Secondary Framing

Material					
Member ID	Component	Locations	Plies	Lumber (Size Species Grade)	Matl. ID
CJ1	Btm Chd Brace	C1	1	2x6 SPF No.2	317
E1:C2	Column (End)	E1:C2, E1:C5, E2:C2, E2:C5	1	F666 Lester No.1	5275
E1:C3	Column (End)	E1:C3, E1:C4, E2:C3, E2:C4	1	F666 Lester No.1	5275
FH:S1:D4	False Header	S1:D4	1	2x6 Lester No.2	2015
FH:S1:D5	False Header	S1:D5	1	2x10 Lester No.1	2060
FH:S2:D9	False Header	S2:D9	1	2x10 Lester No.1	2060
GW1	Wall Girt (Flush)	S1, S2	1	2x6 Lester No.2	2015
GW2	Wall Girt (Flush)	S1	1	2x8 Lester No.2	2035
GW3	Wall Girt (Flush)	E1, E2	1	2x6 Lester No.2	2015
H:S1:D3	Structural Header	S1:D3	1	8-3/4x27-1/2 SP/SP 24F-V5 GLULAM	3190
H:S2:D6	Structural Header	S2:D6	1	5-1/4x24-3/4 SP/SP 24F-V5 GLULAM	3235
H:S2:D7	Structural Header	S2:D7	1	5-1/4x24-3/4 SP/SP 24F-V5 GLULAM	3235
H:S2:D8	Structural Header	S2:D8	1	5-1/4x24-3/4 SP/SP 24F-V5 GLULAM	3235
PR1	Purlin (Flush)	R1	1	2x8 Lester No.2	2035
PR1 UnbSnow	Purlin (Flush)	R1	1	2x8 Lester No.2	2035
PR1 UnbSnow	Purlin (Flush)	R1	1	2x8 Lester No.2	2035
S1:C1 (Typ)	Column (Corner)	S1:C1, S2:C1	1	F666 Lester No.1	5275
S1:C2 (Typ)	Column (Side)	S1:C2, S1:C3	1	F6666 Lester No.1	5375
S1:C4	Column (Side)	S1:C4, S2:C2	1	F6666 Lester No.1	5375
S1:C5	Column (Side)	S1:C5	1	f0F00000 Lester No.1	20094
S1:C8	Column (Side)	S1:C8	1	f0F00000 Lester No.1	20094
S1:C9	Column (Corner)	S1:C9	1	f6F888 Lester No.1	20059
S2:C3	Column (Side)	S2:C3	1	f0F66666 Lester No.1	20044
S2:C5	Column (Side)	S2:C5, S2:C7	1	f0F666666 Lester No.1	20049

S2:C9	Column (Corner)	S2:C9	1	f8F6666 Lester No.1	20039
L1.E1:C2	Column (End)	L1.E1:C2	1	F6666 Lester No.1	5375
L1.E1:GW4	Wall Girt (Flush)	L1.E1	1	2x6 Lester No.2	2015
L1.E2:C2	Column (End)	L1.E2:C2	1	F6666 Lester No.1	5375
L1.S1:C1 (Typ)	Column (Corner)	L1.S1:C1, L1.S1:C6	1	F666 Lester No.1	5275
L1.S1:C2 (Typ)	Column (Side)	L1.S1:C2 to L1.S1:C5	1	F666 Lester No.1	5275
L1.S1:GW1	Wall Girt (Flush)	L1.S1	1	2x6 Lester No.2	2015
L1:S1:CJ	LeanTo Ceiling Joist	L1:S1	1	2x6 Lester No.2	2015
L1:S1:CJ-T	Btm Chd Brace Tee		1	2x4 SPF No.2	313
L1:S1:P1	LeanTo Purlin	L1:S1	1	2x8 Lester No.2	2035
L2:S2:CJ	LeanTo Ceiling Joist	L2:S2	1	2x6 Lester No.2	2015
L2:S2:CJ-T	Btm Chd Brace Tee		1	2x4 SPF No.2	313
L2:S2:P1	LeanTo Purlin	L2:S2	1	2x8 Lester No.2	2035
L2.E1:C2	Column (End)	L2.E1:C2	1	F6666 Lester No.1	5375
L2.E1:GW5	Wall Girt (Flush)	L2.E1	1	2x6 Lester No.2	2015
L2.E2:C2	Column (End)	L2.E2:C2	1	F6666 Lester No.1	5375
L2.S1:C1 (Typ)	Column (Corner)	L2.S1:C1, L2.S1:C8	1	F666 Lester No.1	5275
L2.S1:C2 (Typ)	Column (Side)	L2.S1:C2 to L2.S1:C7	1	F666 Lester No.1	5275
L2.S1:GW1	Wall Girt (Flush)	L2.S1	1	2x6 Lester No.2	2015

Geometry and Bracing				
Member ID	**Length**	**Spacing**	**Top Edge Brace Spacing**	**Bottom Edge Brace Spacing**
CJ1	9'-10 3/4"	2'-0"	9'-10 3/4"	9'-10 3/4"
E1:C2	17'-0"	10'-0"	2'-0"	2'-0"
E1:C3	19'-6"	10'-3"	2'-0"	2'-0"
FH:S1:D4	10'-0 1/2"	2'-3"	10'-0 1/2"	10'-0 1/2"
FH:S1:D5	9'-11 1/2"	2'-3"	9'-11 1/2"	9'-11 1/2"
FH:S2:D9	10'-0 1/2"	2'-3"	10'-0 1/2"	10'-0 1/2"
GW1	9'-5 1/2"	2'-0"	1'-0"	9'-5 1/2"
GW2	9'-5"	2'-0"	1'-0"	9'-5"
GW3	10'-0"	2'-0"	1'-0"	10'-0"
H:S1:D3	29'-6 1/2"	0'-0"	10'-0 1/2"	29'-6 1/2"
H:S2:D6	19'-6"	0'-0"	9'-9 1/4"	19'-6"
H:S2:D7	19'-6"	0'-0"	9'-9 1/4"	19'-6"
H:S2:D8	19'-5 1/4"	0'-0"	9'-8 3/4"	19'-5 1/4"
PR1	9'-10 3/4"	2'-0"	1'-0"	9'-10 3/4"
PR1 UnbSnow	9'-10 3/4"	2'-0"	1'-0"	9'-10 3/4"
PR1 UnbSnow	9'-10 3/4"	2'-0"	1'-0"	9'-10 3/4"
S1:C1 (Typ)	14'-6"	10'-0 7/8"	2'-0"	2'-0"
S1:C2 (Typ)	14'-6"	10'-0"	2'-0"	2'-0"
S1:C4	14'-6"	10'-0 3/4"	2'-0"	2'-0"
S1:C5	14'-6"	10'-0 3/4"	14'-6"	14'-6"
S1:C8	14'-6"	10'-1 1/8"	14'-6"	14'-6"
S1:C9	14'-6"	10'-0 7/8"	2'-0"	2'-0"
S2:C3	14'-6"	10'-0 1/2"	14'-6"	14'-6"
S2:C5	14'-6"	10'-0 3/4"	14'-6"	14'-6"
S2:C9	14'-6"	10'-0 7/8"	2'-0"	2'-0"

L1.E1:C2	11'-11"	10'-3"	2'-0"	2'-0"
L1.E1:GW4	9'-5"	2'-0"	1'-0"	9'-5"
L1.E2:C2	11'-11"	10'-3"	2'-0"	2'-0"
L1.S1:C1 (Typ)	10'-9 1/4"	10'-4 1/4"	2'-0"	2'-0"
L1.S1:C2 (Typ)	10'-9 1/4"	10'-2"	2'-0"	2'-0"
L1.S1:GW1	9'-9 1/4"	2'-0"	1'-0"	9'-9 1/4"
L1:S1:CJ	10'-1 1/2"	2'-0"	10'-1 1/2"	1'-0"
L1:S1:CJ-T	10'-1 1/2"	2'-0"	0'-0"	0'-0"
L1:S1:P1	10'-1 1/2"	2'-0"	1'-0"	10'-1 1/2"
L2:S2:CJ	10'-4 1/2"	2'-0"	10'-4 1/2"	1'-0"
L2:S2:CJ-T	10'-4 1/2"	2'-0"	0'-0"	0'-0"
L2:S2:P1	10'-4 1/2"	2'-0"	1'-0"	10'-4 1/2"
L2.E1:C2	11'-11"	10'-3"	2'-0"	2'-0"
L2.E1:GW5	9'-5"	2'-0"	1'-0"	9'-5"
L2.E2:C2	11'-11"	10'-3"	2'-0"	2'-0"
L2.S1:C1 (Typ)	10'-9 1/4"	10'-4 1/4"	2'-0"	2'-0"
L2.S1:C2 (Typ)	10'-9 1/4"	10'-3"	2'-0"	2'-0"
L2.S1:GW1	10'-2"	2'-0"	1'-0"	10'-2"

Uniform Loads

Member ID	Snow (psf)	Dead (psf)	Wind (psf)	Live (psf)	Member Weight (lb)	Add Member Weight
CJ1	0	15	0	0	16.5	False
E1:C2	0	6	8.81	25	0	True
E1:C3	0	6	8.81	25	0	True
FH:S1:D4	0	0	10.03	0	19.68	False
FH:S1:D5	0	0	10.03	0	32.83	False
FH:S2:D9	0	0	10.03	0	33.11	False
GW1	0	0	-18.08	0	18.54	False
GW2	0	0	-18.08	0	24.33	False
GW3	0	0	-18.08	0	19.6	False
H:S1:D3	0	0	0	0	1813.65	True
H:S2:D6	0	0	0	0	646.46	True
H:S2:D7	0	0	0	0	646.46	True
H:S2:D8	0	0	0	0	644.39	True
PR1	20	15	8.96	25	25.57	False
PR1 UnbSnow	33.2	15	8.96	25	25.57	False
PR1 UnbSnow	33.2	15	8.96	25	25.57	False
S1:C1 (Typ)	0	6	10.03	0	0	True
S1:C2 (Typ)	0	6	10.03	0	0	True
S1:C4	0	6	10.03	0	0	True
S1:C5	0	6	10.03	0	0	True
S1:C8	0	6	10.03	0	0	True
S1:C9	0	6	10.03	0	0	True
S2:C3	0	6	10.03	0	0	True
S2:C5	0	6	10.03	0	0	True
S2:C9	0	6	10.03	0	0	True
L1.E1:C2	0	6	12.62	25	0	True
L1.E1:GW4	0	0	-16	0	18.46	False
L1.E2:C2	0	6	12.62	25	0	True

L1.S1:C1 (Typ)	0	6	12.62	0	0	True
L1.S1:C2 (Typ)	0	3	9.91	0	0	True
L1.S1:GW1	0	0	-16	0	19.15	False
L1:S1:CJ	0	15	5	0	19.84	False
L1:S1:CJ-T	0	0	0	0	0	False
L1:S1:P1	20	15	8.86	25	26.16	False
L2:S2:CJ	0	15	5	0	20.34	False
L2:S2:CJ-T	0	0	0	0	0	False
L2:S2:P1	20	15	8.86	25	26.81	False
L2.E1:C2	0	6	12.62	25	0	True
L2.E1:GW5	0	0	-16	0	18.46	False
L2.E2:C2	0	6	12.62	25	0	True
L2.S1:C1 (Typ)	0	6	12.62	0	0	True
L2.S1:C2 (Typ)	0	3	9.91	0	0	True
L2.S1:GW1	0	0	-16	0	19.93	False

Concentrated Loads

Member ID	Point Loads – Location (in), Dead (lb), Snow (lb), Wind (lb) ; etc;
H:S1:D3	117.25,7773.6,5283,-2680.9,-3351.1,6603.4,0;237.75,7758.1,5272.4,-2675.5,-3344.4,6590.2,0;117.25,3122.9,2081.8,-1409.6,-1409.6,0,0;237.25,3122.9,2081.8,-1409.6,-1409.6,0,0
H:S2:D6	116.75,7773.6,5283,-2680.9,-3351.1,6603.4,0;114.75,3109.9,2073.1,-1400.1,-1400.1,0,0
H:S2:D7	116.75,7773.6,5283,-2680.9,-3351.1,6603.4,0;119.25,3187.6,2124.9,-1435.1,-1435.1,0,0
H:S2:D8	116.75,7796.9,5298.8,-2688.9,-3361.2,6623.2,0;117.75,3109.9,2073.1,-1400.1,-1400.1,0,0
S1:C2 (Typ)	174,7725.3,5250.2,-2664.2,-3330.3,6562.4,-3330.3

Stress Indices and Deflections

Member ID	Maximum Combined Stress Index (CSI)	Maximum Shear Stress Index (SSI)	Maximum Deflection (in)	Allowable Deflection	Maximum Deflection Ratio
CJ1	0.595	0.199	0.222	L/240 DL+LL	L / 535
E1:C2	0.681	0.169	0.218	L/-1 DL+LL	L / 936
E1:C3	0.722	0.173	0.224	L/-1 DL+LL	L / 1045
FH:S1:D4	0.421	0.066	0.124	2.5 in.	L / 972
FH:S1:D5	0.197	0.036	0.022	2.5 in.	L / 5432
FH:S2:D9	0.202	0.036	0.023	2.5 in.	L / 5240
GW1	0.544	0.099	0.157	2.5 in.	L / 723
GW2	0.39	0.072	0.067	2.5 in.	L / 1687
GW3	0.639	0.105	0.195	2.5 in.	L / 616
H:S1:D3	0.793	0.344	1.154	1.5 in.	L / 308
H:S2:D6	0.845	0.316	0.442	L/180 DL+LL	L / 530
H:S2:D7	0.849	0.317	0.444	L/180 DL+LL	L / 528
H:S2:D8	0.845	0.315	0.438	L/180 DL+LL	L / 533
PR1	0.679	0.216	0.259	1 in.	L / 459
PR1 UnbSnow	0.888	0.283	0.312	1 in.	L / 381
PR1 UnbSnow	0.888	0.283	0.312	1 in.	L / 381
S1:C1 (Typ)	0.076	0	0	L/-1 DL+LL	NA
S1:C2 (Typ)	0.677	0.153	0.224	L/120 DL+LL	L / 807
S1:C4	0.808	0.085	0.141	L/-1 DL+LL	L / 1235
S1:C5	0.546	0.014	0.014	L/-1 DL+LL	L / 12429
S1:C8	0.547	0.012	0.009	L/-1 DL+LL	L / 19334
S1:C9	0.289	0.038	0.005	L/-1 DL+LL	L / 34800

S2:C3	0.682	0.015	0.036	L/-1 DL+LL	L / 4834
S2:C5	0.781	0.013	0.032	L/-1 DL+LL	L / 5438
S2:C9	0.446	0.043	0.005	L/-1 DL+LL	L / 34800
L1.E1:C2	0.838	0.147	0.139	L/-1 DL+LL	L / 1029
L1.E1:GW4	0.476	0.087	0.136	2.5 in.	L / 831
L1.E2:C2	0.839	0.147	0.139	L/-1 DL+LL	L / 1029
L1.S1:C1 (Typ)	0.063	0	0	L/-1 DL+LL	NA
L1.S1:C2 (Typ)	0.266	0.126	0.072	L/-1 DL+LL	L / 1796
L1.S1:GW1	0.53	0.091	0.158	2.5 in.	L / 743
L1:S1:CJ	0.683	0.157	0.244	L/240 DL+LL	L / 498
L1:S1:CJ-T	0	0	0		
L1:S1:P1	0.71	0.222	0.283	1 in.	L / 430
L2:S2:CJ	0.725	0.162	0.269	L/240 DL+LL	L / 463
L2:S2:CJ-T	0	0	0		
L2:S2:P1	0.746	0.228	0.312	1 in.	L / 400
L2.E1:C2	0.838	0.147	0.139	L/-1 DL+LL	L / 1029
L2.E1:GW5	0.476	0.087	0.136	2.5 in.	L / 831
L2.E2:C2	0.839	0.147	0.139	L/-1 DL+LL	L / 1029
L2.S1:C1 (Typ)	0.063	0	0	L/-1 DL+LL	NA
L2.S1:C2 (Typ)	0.268	0.127	0.072	L/-1 DL+LL	L / 1796
L2.S1:GW1	0.593	0.095	0.185	2.5 in.	L / 660

Supports and Reactions

Member ID	Maximum Reaction (lb)	Required Bearing (in)	Actual Bearing (in)	Support Locations
CJ1	148.4	0.23	1.5	0,118.75
E1:C2	3908.3	0	3.5	
E1:C3	4174	0	3.5	
FH:S1:D4	113.3	0.13	1.5	0,120.5
FH:S1:D5	112.4	0.13	1.5	0,119.5
FH:S2:D9	113.3	0.13	1.5	0,120.5
GW1	171	0	1.5	0,113.5
GW2	170.3	0	1.5	0,113
GW3	180.8	0	1.5	0,120
H:S1:D3	19169.1	0.85	0	
H:S2:D6	9506.9	0.32	0	
H:S2:D7	9544.9	0.32	0	
H:S2:D8	9493.6	0.31	0	
PR1	400.5	0.47	1.5	0,118.75
PR1 UnbSnow	476.9	0.56	1.5	0,118.75
PR1 UnbSnow	476.9	0.56	1.5	0,118.75
S1:C1 (Typ)	2536.8	0	3.5	0,F;174,RV
S1:C2 (Typ)	15404.4	0	3.5	0,F;174,O,Free,D0.139,Free,W;200
S1:C4	18002	0	3.5	
S1:C5	39138.9	0	3.5	
S1:C8	39215.2	0	3.5	
S1:C9	5200.6	0	3.5	
S2:C3	29794.2	0	3.5	
S2:C5	38853.1	0	3.5	
S2:C9	14297	0	3.5	
L1.E1:C2	3675.4	0	3.5	

L1.E1:GW4	150.7	0	1.5	0,113
L1.E2:C2	3774.4	0	3.5	
L1.S1:C1 (Typ)	2136	0	5.5	0,F;129.25,RV
L1.S1:C2 (Typ)	6058.7	0	5.5	0,F;118,RV
L1.S1:GW1	156.3	0	1.5	0,117.25
L1:S1:CJ	151.9	0.18	1.5	0,121.5
L1:S1:CJ-T	0	0	0	
L1:S1:P1	409	0.48	1.5	0,121.5
L2:S2:CJ	155.6	0.18	1.5	0,124.5
L2:S2:CJ-T	0	0	0	
L2:S2:P1	419.1	0.49	1.5	0,124.5
L2.E1:C2	3675.4	0	3.5	
L2.E1:GW5	150.7	0	1.5	0,113
L2.E2:C2	3774.4	0	3.5	
L2.S1:C1 (Typ)	2136	0	5.5	0,F;129.25,RV
L2.S1:C2 (Typ)	6107.9	0	5.5	0,F;118,RV
L2.S1:GW1	162.7	0	1.5	0,122

Primary Framing - Trusses

Description						
Truss ID	**Description**	**Shape**	**Type**	**Plies**	**Span**	**Spacing**
T1	TR:50-06/2P/TRUS/10OC/25-15-15/12-OH-12/P3/12/T65-DFINK	Triangular	T65-DFINK	2	50'-6"	10'-0 3/4"
L1:S1:T1	TR:20-06/1P/MONO/10OC/25-15-15/-2-OH-0/P2/14/M32-Fink	Mono	M32-Fink	1	20'-6"	10'-2"
L1:S1:TG1	TR:20-06/1P/MONG/5OC/25-15-15/-2-OH-0/P2/14/M32-Fink	Mono_Gable	M32-Fink	1	20'-6"	5'-1 1/2"
L1:S1:TG2	TR:20-06/1P/MONG/5OC/25-15-15/-2-OH-0/P2/14/M32-Fink	Mono_Gable	M32-Fink	1	20'-6"	5'-0 1/2"
L2:S2:T1	TR:20-06/1P/MONO/10OC/25-15-15/-2-OH-0/P2/14/M32-Fink	Mono	M32-Fink	1	20'-6"	10'-3"
L2:S2:TG1	TR:20-06/1P/MONG/5OC/25-15-15/-2-OH-0/P2/14/M32-Fink	Mono_Gable	M32-Fink	1	20'-6"	5'-0"
L2:S2:TG2	TR:20-06/1P/MONG/5OC/25-15-15/-2-OH-0/P2/14/M32-Fink	Mono_Gable	M32-Fink	1	20'-6"	5'-0"
L1:S1:T1	TR:20-06/1P/MONO/10OC/25-15-15/-2-OH-0/P2/14/M32-Fink	Mono	M32-Fink	1	20'-6"	10'-2"
L1:S1:TG1	TR:20-06/1P/MONG/5OC/25-15-15/-2-OH-0/P2/14/M32-Fink	Mono_Gable	M32-Fink	1	20'-6"	5'-1 1/2"
L1:S1:TG2	TR:20-06/1P/MONG/5OC/25-15-15/-2-OH-0/P2/14/M32-Fink	Mono_Gable	M32-Fink	1	20'-6"	5'-0 1/2"
L2:S2:T1	TR:20-06/1P/MONO/10OC/25-15-15/-2-OH-0/P2/14/M32-Fink	Mono	M32-Fink	1	20'-6"	10'-3"
L2:S2:TG1	TR:20-06/1P/MONG/5OC/25-15-15/-2-OH-0/P2/14/M32-Fink	Mono_Gable	M32-Fink	1	20'-6"	5'-0"
L2:S2:TG2	TR:20-06/1P/MONG/5OC/25-15-15/-2-OH-0/P2/14/M32-Fink	Mono_Gable	M32-Fink	1	20'-6"	5'-0"

Truss Geometry and Bracing								
Truss ID	**Heel Height (in)**	**Left OH (in)**	**Right OH (in)**	**Face Cut (in)**	**Top Chord Slope (/12)**	**Purlin Spacing (in)**	**Bottom Chord Slope (/12)**	**Bottom Chord Brace Spacing (in)**

T1	12	12	12	5	3	24	0	24
L1:S1:T1	14.5	0	0	5.25	2	17	0	24
L1:S1:TG1	14.5	0	0	5.25	2	17	0	24
L1:S1:TG2	14.5	0	0	5.25	2	17	0	24
L2:S2:T1	14.5	0	0	5.25	2	17	0	24
L2:S2:TG1	14.5	0	0	5.25	2	17	0	24
L2:S2:TG2	14.5	0	0	5.25	2	17	0	24
L1:S1:T1	14.5	0	0	5.25	2	17	0	24
L1:S1:TG1	14.5	0	0	5.25	2	17	0	24
L1:S1:TG2	14.5	0	0	5.25	2	17	0	24
L2:S2:T1	14.5	0	0	5.25	2	17	0	24
L2:S2:TG1	14.5	0	0	5.25	2	17	0	24
L2:S2:TG2	14.5	0	0	5.25	2	17	0	24

Truss Loads

Truss ID	TC Snow Load (psf)	TC Live Load (psf)	TC Dead Load (psf)	BC Dead Load (psf)	Weight (lb)	Add Truss Weight
T1	20	25	15	15	890.49	False
L1:S1:T1	20	25	15	15	159.98	False
L1:S1:TG1	20	25	15	15	174.15	False
L1:S1:TG2	20	25	15	15	174.15	False
L2:S2:T1	20	25	15	15	190.1	False
L2:S2:TG1	20	25	15	15	174.15	False
L2:S2:TG2	20	25	15	15	174.15	False
L1:S1:T1	20	25	15	15	159.98	False
L1:S1:TG1	20	25	15	15	174.15	False
L1:S1:TG2	20	25	15	15	174.15	False
L2:S2:T1	20	25	15	15	190.1	False
L2:S2:TG1	20	25	15	15	174.15	False
L2:S2:TG2	20	25	15	15	174.15	False

Truss Material

Truss ID	Location	Plies	Size / Species / Grade	Material ID
L2:S2:TG2	Top Chord	1	2x10 DFL/SYP M-23/2400 MSR 1.8E	1785
L2:S2:TG2	Bottom Chord	1	2x10 DFL/SYP M-23/2400 MSR 1.8E	1785
L2:S2:TG2	Wedge	1	2x6 Lester No.1	2020
L2:S2:TG1	Top Chord	1	2x10 DFL/SYP M-23/2400 MSR 1.8E	1785
L2:S2:TG1	Bottom Chord	1	2x10 DFL/SYP M-23/2400 MSR 1.8E	1785
L2:S2:TG1	Wedge	1	2x6 Lester No.1	2020
L2:S2:T1	Top Chord	1	2x12 DFL/SYP M-23/2400 MSR 1.8E	1805
L2:S2:T1	Bottom Chord	1	2x10 DFL/SYP M-23/2400 MSR 1.8E	1785
L2:S2:T1	Wedge	1	2x4 Lester No.1	2000
L1:S1:TG2	Top Chord	1	2x10 DFL/SYP M-23/2400 MSR 1.8E	1785
L1:S1:TG2	Bottom Chord	1	2x10 DFL/SYP M-23/2400 MSR 1.8E	1785
L1:S1:TG2	Wedge	1	2x6 Lester No.1	2020
L1:S1:TG1	Top Chord	1	2x10 DFL/SYP M-23/2400 MSR 1.8E	1785
L1:S1:TG1	Bottom Chord	1	2x10 DFL/SYP M-23/2400 MSR 1.8E	1785
L1:S1:TG1	Wedge	1	2x6 Lester No.1	2020
L1:S1:T1	Top Chord	1	2x10 DFL/SYP M-23/2400 MSR 1.8E	1785
L1:S1:T1	Bottom Chord	1	2x8 DFL/SYP M-23/2400 MSR 1.8E	1765
L1:S1:T1	Wedge	1	2x6 Lester No.1	2020
L2:S2:TG2	Top Chord	1	2x10 DFL/SYP M-23/2400 MSR 1.8E	1785
L2:S2:TG2	Bottom Chord	1	2x10 DFL/SYP M-23/2400 MSR 1.8E	1785
L2:S2:TG2	Wedge	1	2x6 Lester No.1	2020
L2:S2:TG1	Top Chord	1	2x10 DFL/SYP M-23/2400 MSR 1.8E	1785
L2:S2:TG1	Bottom Chord	1	2x10 DFL/SYP M-23/2400 MSR 1.8E	1785

L2:S2:TG1	Wedge	1	2x6 Lester No.1	2020
L2:S2:T1	Top Chord	1	2x12 DFL/SYP M-23/2400 MSR 1.8E	1805
L2:S2:T1	Bottom Chord	1	2x10 DFL/SYP M-23/2400 MSR 1.8E	1785
L2:S2:T1	Wedge	1	2x4 Lester No.1	2000
L1:S1:TG2	Top Chord	1	2x10 DFL/SYP M-23/2400 MSR 1.8E	1785
L1:S1:TG2	Bottom Chord	1	2x10 DFL/SYP M-23/2400 MSR 1.8E	1785
L1:S1:TG2	Wedge	1	2x6 Lester No.1	2020
L1:S1:TG1	Top Chord	1	2x10 DFL/SYP M-23/2400 MSR 1.8E	1785
L1:S1:TG1	Bottom Chord	1	2x10 DFL/SYP M-23/2400 MSR 1.8E	1785
L1:S1:TG1	Wedge	1	2x6 Lester No.1	2020
L1:S1:T1	Top Chord	1	2x10 DFL/SYP M-23/2400 MSR 1.8E	1785
L1:S1:T1	Bottom Chord	1	2x8 DFL/SYP M-23/2400 MSR 1.8E	1765
L1:S1:T1	Wedge	1	2x6 Lester No.1	2020
T1	Top Chord	2	2x10 DFL/SYP M-23/2400 MSR 1.8E	1785
T1	Bottom Chord	2	2x10 DFL/SYP M-23/2400 MSR 1.8E	1785

Stress Indices and Deflection

Truss ID	Top Chord CSI	Bottom Chord CSI	Web CSI	Maximum Deflection (in)	Allowable Deflection (in)	Maximum Deflection Ratio
T1	0.691	0.879	0.706	2.116	1	L / 287
L1:S1:T1	1.368	1.083	30.102	1.228	1	L / 201
L1:S1:TG1	0.622	0.446	5.491	0.506	1	L / 487
L1:S1:TG2	0.612	0.438	5.314	0.498	1	L / 494
L2:S2:T1	1.013	0.901	15.766	0.837	1	L / 294
L2:S2:TG1	0.607	0.435	5.226	0.494	1	L / 498
L2:S2:TG2	0.607	0.435	5.226	0.494	1	L / 498
L1:S1:T1	1.368	1.083	30.102	1.228	1	L / 201
L1:S1:TG1	0.622	0.446	5.491	0.506	1	L / 487
L1:S1:TG2	0.612	0.438	5.314	0.498	1	L / 494
L2:S2:T1	1.013	0.901	15.766	0.837	1	L / 294
L2:S2:TG1	0.607	0.435	5.226	0.494	1	L / 498
L2:S2:TG2	0.607	0.435	5.226	0.494	1	L / 498

Reactions and Supports

Truss ID	Maximum Reaction (lb)	Req'd Bearing Length (in)	Actual Bearing Length (in)	Seat Cut (in)	Bearing Offset (in)	Butt Cut (in)
T1	14377	5.74	5.5	5.5	0	2.465
L1:S1:T1	5796.3	5.85	5.5	5.5	1.5	5.122
L1:S1:TG1	2922	2.95	5.5	3.5	1.5	5.122
L1:S1:TG2	2874.6	2.9	5.5	3.5	1.5	5.122
L2:S2:T1	5843.9	5.89	5.5	5.5	1.5	3.095
L2:S2:TG1	2850.7	2.88	5.5	3.5	1.5	5.122
L2:S2:TG2	2850.7	2.88	5.5	3.5	1.5	5.122
L1:S1:T1	5796.3	5.85	5.5	5.5	1.5	5.122
L1:S1:TG1	2922	2.95	5.5	3.5	1.5	5.122
L1:S1:TG2	2874.6	2.9	5.5	3.5	1.5	5.122
L2:S2:T1	5843.9	5.89	5.5	5.5	1.5	3.095
L2:S2:TG1	2850.7	2.88	5.5	3.5	1.5	5.122
L2:S2:TG2	2850.7	2.88	5.5	3.5	1.5	5.122

Truss Chord Markings		
Truss ID	**Location**	**Purlin and Bottom Chord Brace Marking Layout**
T1	Top Chord	7, 17.3324, 12 @ 24
T1	Bottom Chord	27, 23 @ 24, 27
L1:S1:T1	Top Chord	27.293, 1 @ 17.000, 24
L1:S1:T1	Bottom Chord	25.750, 15.000, 8 @ 24.000, 22.500
L1:S1:TG1	Top Chord	20.762, 1 @ 17.000, 24
L1:S1:TG1	Bottom Chord	20.500, 15.000, 8 @ 24.000, 22.500
L1:S1:TG2	Top Chord	20.762, 1 @ 17.000, 24
L1:S1:TG2	Bottom Chord	20.500, 15.000, 8 @ 24.000, 22.500
L2:S2:T1	Top Chord	21.971, 1 @ 17.000, 24
L2:S2:T1	Bottom Chord	20.500, 15.000, 8 @ 24.000, 22.500
L2:S2:TG1	Top Chord	20.762, 1 @ 17.000, 24
L2:S2:TG1	Bottom Chord	20.500, 15.000, 8 @ 24.000, 22.500
L2:S2:TG2	Top Chord	20.762, 1 @ 17.000, 24
L2:S2:TG2	Bottom Chord	20.500, 15.000, 8 @ 24.000, 22.500
L1:S1:T1	Top Chord	27.293, 1 @ 17.000, 24
L1:S1:T1	Bottom Chord	25.750, 15.000, 8 @ 24.000, 22.500
L1:S1:TG1	Top Chord	20.762, 1 @ 17.000, 24
L1:S1:TG1	Bottom Chord	20.500, 15.000, 8 @ 24.000, 22.500
L1:S1:TG2	Top Chord	20.762, 1 @ 17.000, 24
L1:S1:TG2	Bottom Chord	20.500, 15.000, 8 @ 24.000, 22.500
L2:S2:T1	Top Chord	21.971, 1 @ 17.000, 24
L2:S2:T1	Bottom Chord	20.500, 15.000, 8 @ 24.000, 22.500
L2:S2:TG1	Top Chord	20.762, 1 @ 17.000, 24
L2:S2:TG1	Bottom Chord	20.500, 15.000, 8 @ 24.000, 22.500
L2:S2:TG2	Top Chord	20.762, 1 @ 17.000, 24
L2:S2:TG2	Bottom Chord	20.500, 15.000, 8 @ 24.000, 22.500

Truss to Column Connection		
Truss ID	**Detail**	**Description**
T1	HD632	(7) 1/4"X6" FlatLOK, Med, Uni
L1:S1:T1	IF132;FK166	(7) 4.5" FLATLOKS @ LEANTO COL; (15) 6" FLATLOKS @ BLDG COL, (3) @ CORBEL BLK
L1:S1:TG1	;FK166	4.5" FLATLOKS @ LEANTO COL: (6) IN TC HEEL, (2) IN BC HEEL; 4.5" FLATLOKS @ BLDG COL: (3) IN TC, (4) IN BC, (3) IN WEB 12" O.
L1:S1:TG2	;FK162	4.5" FLATLOKS @ LEANTO COL: (6) IN TC HEEL, (2) IN BC HEEL; 4.5" FLATLOKS @ BLDG COL: (3) IN TC, (4) IN BC, (3) IN WEB 12" O.
L2:S2:T1	IF132;FK166	(7) 4.5" FLATLOKS @ LEANTO COL; (15) 6" FLATLOKS @ BLDG COL, (3) @ CORBEL BLK
L2:S2:TG1	;FK166	4.5" FLATLOKS @ LEANTO COL: (6) IN TC HEEL, (2) IN BC HEEL; 4.5" FLATLOKS @ BLDG COL: (3) IN TC, (4) IN BC, (3) IN WEB 12" O.
L2:S2:TG2	;FK162	4.5" FLATLOKS @ LEANTO COL: (6) IN TC HEEL, (2) IN BC HEEL; 4.5" FLATLOKS @ BLDG COL: (3) IN TC, (4) IN BC, (3) IN WEB 12" O.
L1:S1:T1	IF132;FK166	(7) 4.5" FLATLOKS @ LEANTO COL; (15) 6" FLATLOKS @ BLDG COL, (3) @ CORBEL BLK
L1:S1:TG1	;FK166	4.5" FLATLOKS @ LEANTO COL: (6) IN TC HEEL, (2) IN BC HEEL; 4.5" FLATLOKS @ BLDG COL: (3) IN TC, (4) IN BC, (3) IN WEB 12" O.
L1:S1:TG2	;FK162	4.5" FLATLOKS @ LEANTO COL: (6) IN TC HEEL, (2) IN BC HEEL; 4.5" FLATLOKS @ BLDG COL: (3) IN TC, (4) IN BC, (3) IN WEB 12" O.
L2:S2:T1	IF132;FK166	(7) 4.5" FLATLOKS @ LEANTO COL; (15) 6" FLATLOKS @ BLDG COL, (3) @ CORBEL BLK
L2:S2:TG1	;FK166	4.5" FLATLOKS @ LEANTO COL: (6) IN TC HEEL, (2) IN BC HEEL; 4.5" FLATLOKS @ BLDG COL: (3) IN TC, (4) IN BC, (3) IN WEB 12" O.
L2:S2:TG2	;FK162	4.5" FLATLOKS @ LEANTO COL: (6) IN TC HEEL, (2) IN BC HEEL; 4.5" FLATLOKS @ BLDG COL: (3) IN TC, (4) IN BC, (3) IN WEB 12" O.

Primary Framing – Column Details

Loads		
Member ID	**Maximum Axial Load (lb)**	**Maximum Moment (ft-lb)**
E1:C2	3908.3	2274.6
E1:C3	4174	2319.6
S1:C1 (Typ)	2536.8	0
S1:C2 (Typ)	15404.4	2707.3
S1:C4	18002	1769.8
S1:C5	39138.9	1761.3
S1:C8	39215.2	1323.9
S1:C9	5200.6	104.2
S2:C3	29794.2	843.3
S2:C5	38853.1	932
S2:C9	14297	60.8
L1.E1:C2	3675.4	2300.4
L1.E2:C2	3774.4	2300.4
L1.S1:C1 (Typ)	2136	0
L1.S1:C2 (Typ)	6058.7	1195.6
L2.E1:C2	3675.4	2300.4
L2.E2:C2	3774.4	2300.4
L2.S1:C1 (Typ)	2136	0
L2.S1:C2 (Typ)	6107.9	1205.4

End Columns – Gable Brace						
Member ID	**Configuration**	**Number of Bays**	**Wind Pressure Horizontal Reaction (lb)**	**Wind Pressure Gable Brace Force (lb)**	**Wind Suction Horizontal Reaction (lb)**	**Wind Suction Gable Brace Force (lb)**
E1:C2	DGB + BCB	1	850.6	582.4	927.7	776.1
E1:C3	DGB + BCB	1	890.3	685.8	969.3	900.8
L1.E1:C2	BCB Only	1	0	0	0	0
L1.E2:C2	BCB Only	1	0	0	0	0
L2.E1:C2	BCB Only	1	0	0	0	0
L2.E2:C2	BCB Only	1	0	0	0	0

Knee Brace		
Height (in)	**Maximum Compression (lb)**	**Maximum Tension (lb)**
N/A	N/A	N/A

Embedment and Anchorage			
Column ID	**Restrained Embedment Depth**	**Unrestrained Embedment Depth**	**Anchorage**
E1:C2	4'-0"	NA	Concrete Base Collar
E1:C3	4'-0"	NA	Concrete Base Collar
S1:C1 (Typ)	3'-9"	NA	Concrete Base Collar
S1:C2 (Typ)	4'-0"	NA	Concrete Base Collar
S1:C4	3'-9"	NA	Concrete Base Collar
S1:C5	3'-9"	NA	Concrete Base Collar
S1:C8	3'-9"	NA	Concrete Base Collar
S1:C9	3'-9"	NA	Concrete Base Collar
S2:C3	3'-9"	NA	Concrete Base Collar
S2:C5	3'-9"	NA	Concrete Base Collar
S2:C9	3'-9"	NA	Concrete Base Collar
L1.E1:C2	3'-9"	NA	Concrete Base Collar

L1.E2:C2	3'-9"	NA	Concrete Base Collar
L1.S1:C1 (Typ)	3'-9"	NA	Concrete Base Collar
L1.S1:C2 (Typ)	3'-9"	NA	Concrete Base Collar
L2.E1:C2	3'-9"	NA	Concrete Base Collar
L2.E2:C2	3'-9"	NA	Concrete Base Collar
L2.S1:C1 (Typ)	3'-9"	NA	Concrete Base Collar
L2.S1:C2 (Typ)	3'-9"	NA	Concrete Base Collar

Flexible Diaphragm Analysis Results

Total Diaphragm Load (lb)	Diaphragm Propping Force (lb)	Maximum Frame Deflection (in)	Maximum Chord Tension (lb)	Maximum Diaphragm Force (lb)	Maximum E1 Reaction (lb)	Maximum E2 Reaction (lb)
6795.4	5734.8	0.13	652.2	2872	3299.6	3292.8
5640.4 (Par.)	4683.8	0.106	349.1	2430.9	2856.4 (S1)	2847.3 (S2)

Building Diaphragm

Surfaces for Wind Perpendicular to Ridge (Par.) = Wind Parallel to Ridge					
Surface ID	Description	Effective Surface Length (ft)	Effective Opening Length (ft)	Effective Shear Capacity (lb)	Unit Shear Stiffness (lb/in)
E1	End Wall	46.5	4	18321	35700
E2	End Wall	46.5	4	18321	35700
S1	Side Wall	12.1	68.5	4867.5	35700
S2	Side Wall	11	69.6	4096	35700
C1	Ceiling	50.5	0	0	0
R1	Roof	50.5	0	15150	45000
E1 (Par.)	End Wall	46.5	4	18321	35700
E2 (Par.)	End Wall	46.5	4	18321	35700
S1 (Par.)	Side Wall	12.1	68.5	4867.5	35700
S2 (Par.)	Side Wall	11	69.6	4096	35700
C1 (Par.)	Ceiling	80.6	0	0	0
R1 (Par.)	Roof	80.6	0	24187.5	45000

Forces for Wind Perpendicular to Ridge (Par.) = Wind Parallel to Ridge					
Surface ID	Shear Force (lb)	Maximum Diaph. Shear (lb/ft)	Allowable Diaph. Shear (lb/ft)	Chord Force (lb)	Maximum Corner Force (lb)
E1	3299.6	71	394	--	1235.3
E2	3292.8	70.8	394	--	1374.8
S1	21.8	43.3	394	--	--
S2	34.8	28.4	394	--	--
C1	0	0	0	0	--
R1	2872.1	56.9	300	652.2	--
E1 (Par.)	62.1	14.4	394	--	--
E2 (Par.)	61.2	11.4	394	--	--
S1 (Par.)	2856.5	180.6	394	--	914.3
S2 (Par.)	2847.6	175.3	394	--	1686.6
C1 (Par.)	0	0	0	0	--
R1 (Par.)	2431	30.2	300	349.1	--

Diaphragm Hardware				
Location	Hardware Required	Detail	Description	Special Design Required
Ridge	No	NA	NA	No
Eave	No	NA	NA	No

Foundations

Foundation Material							
Column ID	**Location**	**Material**	**Volume**	**Diameter x Thickness (in)**	**Dead Load (lb)**	**Live Load (lb)**	**Total Load (lb)**
E1:C2	End Wall	Poured	0.0776 CYD	24 x 8	2642	1266.3	3908.3
E1:C3	End Wall	Poured	0.0776 CYD	24 x 8	2875.9	1298.1	4174
S1:C1 (Typ)	Corner	Poured	0.0436 CYD	18 x 8	1785.9	750.9	2536.8
S1:C2 (Typ)	Side Wall	Poured	0.3879 CYD	48 x 10	8795.9	6608.5	15404.4
S1:C4	Side Wall	Poured	0.4266 CYD	48 x 11	10063.1	7938.9	18002
S1:C5	Side Wall	Poured	0.8484 CYD	60 x 14	23326.8	15812.1	39138.9
S1:C8	Side Wall	Poured	0.8484 CYD	60 x 14	23372.3	15842.9	39215.2
S1:C9	Corner	Poured	0.0776 CYD	24 x 8	3130.8	2069.8	5200.6
S2:C3	Side Wall	Poured	0.6147 CYD	53 x 13	17250.8	12543.4	29794.2
S2:C5	Side Wall	Poured	0.8484 CYD	60 x 14	23001	15852.1	38853.1
S2:C9	Corner	Poured	0.3491 CYD	48 x 9	8921.3	5375.7	14297
L1.E1:C2	LeanTo	Poured	0.0776 CYD	24 x 8	2381.7	1293.7	3675.4
L1.E2:C2	LeanTo	Poured	0.0776 CYD	24 x 8	2434.5	1339.9	3774.4
L1.S1:C1 (Typ)	LeanTo	Poured	0.0436 CYD	18 x 8	1497.3	638.7	2136
L1.S1:C2 (Typ)	LeanTo	Poured	0.0776 CYD	24 x 8	3483.8	2574.9	6058.7
L2.E1:C2	LeanTo	Poured	0.0776 CYD	24 x 8	2381.7	1293.7	3675.4
L2.E2:C2	LeanTo	Poured	0.0776 CYD	24 x 8	2434.5	1339.9	3774.4
L2.S1:C1 (Typ)	LeanTo	Poured	0.0436 CYD	18 x 8	1497.3	638.7	2136
L2.S1:C2 (Typ)	LeanTo	Poured	0.0776 CYD	24 x 8	3512	2595.9	6107.9

Member Reactions						
Member ID	**Reaction Member ID**	**Load Type**	**Location (in.)**	**Horizontal Reaction (lb)**	**Vertical Reaction (lb)**	**Moment Reaction (ft lb)**
CJ1	R1:Truss BC	Dead	0	0	148.4	0
CJ1	R2:Truss BC	Dead	118.75	0	148.4	0
E1:C2	R1:Footing	Dead	0	0	2541	0
E1:C2	R1:Footing	DL (Self Wt)	0	0	99.8	0
E1:C2	R1:Footing	Roof Live	0	0	1267.5	0
E1:C2	R1:Footing	Snow	0	0	1014	0
E1:C2	R1:Footing	Wind (P)	0	739.1	-392.9	2103.8
E1:C2	R1:Footing	Wind (S)	0	-801.8	-670.3	-2274.6
E1:C2	R2:Diaph.	Wind (P)	204	-92.1	0	0
E1:C2	R2:Diaph.	Wind (S)	204	102.5	0	0
E1:C2	R3:Diaph.	Wind (P)	172	850.6	0	0
E1:C2	R3:Diaph.	Wind (S)	172	-927.7	0	0
E1:C3	R1:Footing	Dead	0	0	2759.4	0
E1:C3	R1:Footing	DL (Self Wt)	0	0	114.6	0
E1:C3	R1:Footing	Roof Live	0	0	1300	0
E1:C3	R1:Footing	Snow	0	0	1040	0
E1:C3	R1:Footing	Wind (P)	0	754.6	-403	2145.7
E1:C3	R1:Footing	Wind (S)	0	-818.5	-687.4	-2319.6

E1:C3	R2:Diaph.	Wind (P)	234	116.1	0	0
E1:C3	R2:Diaph.	Wind (S)	234	-124.9	0	0
E1:C3	R3:Diaph.	Wind (P)	172	890.3	0	0
E1:C3	R3:Diaph.	Wind (S)	172	-969.3	0	0
FH:S1:D4	R1:Column	Wind (P)	0	0	113.3	0
FH:S1:D4	R1:Column	Wind (S)	0	0	-94.3	0
FH:S1:D4	R2:Column	Wind (P)	120.5	0	113.3	0
FH:S1:D4	R2:Column	Wind (S)	120.5	0	-94.3	0
FH:S1:D5	R1:Column	Wind (P)	0	0	112.4	0
FH:S1:D5	R1:Column	Wind (S)	0	0	-93.5	0
FH:S1:D5	R2:Column	Wind (P)	119.5	0	112.4	0
FH:S1:D5	R2:Column	Wind (S)	119.5	0	-93.5	0
FH:S2:D9	R1:Column	Wind (P)	0	0	113.3	0
FH:S2:D9	R1:Column	Wind (S)	0	0	-94.3	0
FH:S2:D9	R2:Column	Wind (P)	120.5	0	113.3	0
FH:S2:D9	R2:Column	Wind (S)	120.5	0	-94.3	0
GW1	R1:Column	Wind (P)	0	-171	0	0
GW1	R2:Column	Wind (P)	113.5	-171	0	0
GW2	R1:Column	Wind (P)	0	-170.3	0	0
GW2	R2:Column	Wind (P)	113	-170.3	0	0
GW3	R1:Column	Wind (P)	0	-180.8	0	0
GW3	R2:Column	Wind (P)	120	-180.8	0	0
H:S1:D3	R1:Column	Dead	0	0	10880.4	0
H:S1:D3	R1:Column	DL (Self Wt)	0	0	906.9	0
H:S1:D3	R1:Column	Roof Live	0	0	6589.7	0
H:S1:D3	R1:Column	Snow	0	0	7353.9	0
H:S1:D3	R1:Column	Wind (P)	0	0	-4084.9	0
H:S1:D3	R1:Column	Wind (S)	0	0	-4753.8	0
H:S1:D3	R2:Column	Dead	354.5	0	10897.1	0
H:S1:D3	R2:Column	DL (Self Wt)	354.5	0	906.9	0
H:S1:D3	R2:Column	Roof Live	354.5	0	6603.9	0
H:S1:D3	R2:Column	Snow	354.5	0	7365.1	0
H:S1:D3	R2:Column	Wind (P)	354.5	0	-4090.7	0
H:S1:D3	R2:Column	Wind (S)	354.5	0	-4760.9	0
H:S2:D6	R1:Column	Dead	0	0	5480	0
H:S2:D6	R1:Column	DL (Self Wt)	0	0	323.3	0
H:S2:D6	R1:Column	Roof Live	0	0	3308.8	0
H:S2:D6	R1:Column	Snow	0	0	3703.6	0
H:S2:D6	R1:Column	Wind (P)	0	0	-2056.8	0
H:S2:D6	R1:Column	Wind (S)	0	0	-2392.6	0
H:S2:D6	R2:Column	Dead	234	0	5403.5	0
H:S2:D6	R2:Column	DL (Self Wt)	234	0	323.3	0
H:S2:D6	R2:Column	Roof Live	234	0	3294.6	0
H:S2:D6	R2:Column	Snow	234	0	3652.5	0
H:S2:D6	R2:Column	Wind (P)	234	0	-2024.2	0

H:S2:D6	R2:Column	Wind (S)	234	0	-2358.6	0
H:S2:D7	R1:Column	Dead	0	0	5458.3	0
H:S2:D7	R1:Column	DL (Self Wt)	0	0	323.3	0
H:S2:D7	R1:Column	Roof Live	0	0	3308.8	0
H:S2:D7	R1:Column	Snow	0	0	3689.2	0
H:S2:D7	R1:Column	Wind (P)	0	0	-2047.1	0
H:S2:D7	R1:Column	Wind (S)	0	0	-2382.9	0
H:S2:D7	R2:Column	Dead	234	0	5502.9	0
H:S2:D7	R2:Column	DL (Self Wt)	234	0	323.3	0
H:S2:D7	R2:Column	Roof Live	234	0	3294.6	0
H:S2:D7	R2:Column	Snow	234	0	3718.7	0
H:S2:D7	R2:Column	Wind (P)	234	0	-2068.9	0
H:S2:D7	R2:Column	Wind (S)	234	0	-2403.3	0
H:S2:D8	R1:Column	Dead	0	0	5434.2	0
H:S2:D8	R1:Column	DL (Self Wt)	0	0	322.2	0
H:S2:D8	R1:Column	Roof Live	0	0	3308.1	0
H:S2:D8	R1:Column	Snow	0	0	3673.1	0
H:S2:D8	R1:Column	Wind (P)	0	0	-2036.3	0
H:S2:D8	R1:Column	Wind (S)	0	0	-2372.1	0
H:S2:D8	R2:Column	Dead	233.25	0	5472.6	0
H:S2:D8	R2:Column	DL (Self Wt)	233.25	0	322.2	0
H:S2:D8	R2:Column	Roof Live	233.25	0	3315.1	0
H:S2:D8	R2:Column	Snow	233.25	0	3698.8	0
H:S2:D8	R2:Column	Wind (P)	233.25	0	-2052.7	0
H:S2:D8	R2:Column	Wind (S)	233.25	0	-2389.2	0
PR1	R1:Truss	Dead	0	0	148.4	0
PR1	R1:Truss	Roof Live	0	0	247.4	0
PR1	R1:Truss	Snow	0	0	197.9	0
PR1	R1:Truss	Wind (P)	0	0	88.7	0
PR1	R1:Truss	Wind (S)	0	0	-255.5	0
PR1	R2:Truss	Dead	118.75	0	148.4	0
PR1	R2:Truss	Roof Live	118.75	0	247.4	0
PR1	R2:Truss	Snow	118.75	0	197.9	0
PR1	R2:Truss	Wind (P)	118.75	0	88.7	0
PR1	R2:Truss	Wind (S)	118.75	0	-255.5	0
PR1 UnbSnow	R1:Truss	Dead	0	0	148.4	0
PR1 UnbSnow	R1:Truss	Dead	0	0	148.4	0
PR1 UnbSnow	R1:Truss	Roof Live	0	0	247.4	0
PR1 UnbSnow	R1:Truss	Roof Live	0	0	247.4	0
PR1 UnbSnow	R1:Truss	Snow	0	0	328.5	0
PR1 UnbSnow	R1:Truss	Snow	0	0	328.5	0
PR1 UnbSnow	R1:Truss	Wind (P)	0	0	88.7	0

PR1 UnbSnow	R1:Truss	Wind (P)	0	0	88.7	0
PR1 UnbSnow	R1:Truss	Wind (S)	0	0	-255.5	0
PR1 UnbSnow	R1:Truss	Wind (S)	0	0	-255.5	0
PR1 UnbSnow	R2:Truss	Dead	118.75	0	148.4	0
PR1 UnbSnow	R2:Truss	Dead	118.75	0	148.4	0
PR1 UnbSnow	R2:Truss	Roof Live	118.75	0	247.4	0
PR1 UnbSnow	R2:Truss	Roof Live	118.75	0	247.4	0
PR1 UnbSnow	R2:Truss	Snow	118.75	0	328.5	0
PR1 UnbSnow	R2:Truss	Snow	118.75	0	328.5	0
PR1 UnbSnow	R2:Truss	Wind (P)	118.75	0	88.7	0
PR1 UnbSnow	R2:Truss	Wind (P)	118.75	0	88.7	0
PR1 UnbSnow	R2:Truss	Wind (S)	118.75	0	-255.5	0
PR1 UnbSnow	R2:Truss	Wind (S)	118.75	0	-255.5	0
S1:C1 (Typ)	R1:Footing	Dead	0	0	1701.4	0
S1:C1 (Typ)	R1:Footing	DL (Self Wt)	0	0	85.4	0
S1:C1 (Typ)	R1:Footing	Roof Live	0	0	750	0
S1:C1 (Typ)	R1:Footing	Snow	0	0	600	0
S1:C1 (Typ)	R1:Footing	Wind (S)	0	0	-282.6	0
S1:C2 (Typ)	R1:Footing	Dead	0	8.4	8682.8	-121
S1:C2 (Typ)	R1:Footing	DL (Self Wt)	0	0	118.2	0
S1:C2 (Typ)	R1:Footing	Roof Live	0	7.1	6603.4	-101.7
S1:C2 (Typ)	R1:Footing	Snow	0	5.7	5283	-81.4
S1:C2 (Typ)	R1:Footing	Unb. Snow (WFL)	0	5.3	5038.3	-75.9
S1:C2 (Typ)	R1:Footing	Wind (E+)	0	-860.5	-2490.2	2437.5
S1:C2 (Typ)	R1:Footing	Wind (E+)	0	861.1	-3207.4	-2445.2
S1:C2 (Typ)	R1:Footing	Wind (L Min)	0	-444.3	427.2	1404.9
S1:C2 (Typ)	R1:Footing	Wind (L Min)	0	-444.3	-427.2	1404.9
S1:C2 (Typ)	R1:Footing	Wind (L+)	0	-761.1	-2827.3	2274
S1:C2 (Typ)	R1:Footing	Wind (L+)	0	-425.4	-3153.1	1382.5
S1:C2 (Typ)	R1:Footing	Wind (L-)	0	-269.8	-1382.6	879.2
S1:C2 (Typ)	R1:Footing	Wind (L-)	0	-917.6	-1707.8	2779.9
S1:C4	R1:Footing	Dead	0	0	9956.8	0
S1:C4	R1:Footing	DL (Self Wt)	0	0	113.6	0
S1:C4	R1:Footing	Roof Live	0	0	7931.6	0

S1:C4	R1:Footing	Snow	0	0	6345.3	0
S1:C4	R1:Footing	Wind (E+)	0	-498.5	-3351.1	-1551.3
S1:C4	R1:Footing	Wind (P)	0	532.3	-2680.9	1769.8
S1:C4	R1:Footing	Wind (S)	0	-444.8	-4069.8	-1497.4
S1:C4	R2:Diaph.	Wind (E+)	174	-441.7	0	0
S1:C4	R2:Diaph.	Wind (P)	174	453	0	0
S1:C4	R2:Diaph.	Wind (S)	174	-375.4	0	0
S1:C5	R1:Footing	Dead	0	0	22117.8	0
S1:C5	R1:Footing	DL (Self Wt)	0	0	1193.5	0
S1:C5	R1:Footing	Roof Live	0	0	15827.6	0
S1:C5	R1:Footing	Snow	0	0	14744.6	0
S1:C5	R1:Footing	Wind (E+)	0	-122.4	-3351.1	-566.8
S1:C5	R1:Footing	Wind (P)	0	208.7	-6765.8	1761.3
S1:C5	R1:Footing	Wind (S)	0	-187.3	-9532	-1661.9
S1:C5	R2:Diaph.	Wind (E+)	174	-359.5	0	0
S1:C5	R2:Diaph.	Wind (P)	174	296.2	0	0
S1:C5	R2:Diaph.	Wind (S)	174	-233.1	0	0
S1:C8	R1:Footing	Dead	0	0	22159.4	0
S1:C8	R1:Footing	DL (Self Wt)	0	0	1193.5	0
S1:C8	R1:Footing	Roof Live	0	0	15862.3	0
S1:C8	R1:Footing	Snow	0	0	14772.2	0
S1:C8	R1:Footing	Wind (E+)	0	-122.6	-3361.5	-568.3
S1:C8	R1:Footing	Wind (P)	0	178.7	-6779.9	1323.9
S1:C8	R1:Footing	Wind (S)	0	-157.2	-9549.5	-1224.3
S1:C8	R2:Diaph.	Wind (E+)	174	-360.6	0	0
S1:C8	R2:Diaph.	Wind (P)	174	327.7	0	0
S1:C8	R2:Diaph.	Wind (S)	174	-264.4	0	0
S1:C9	R1:Footing	Dead	0	0	2992.3	0
S1:C9	R1:Footing	DL (Self Wt)	0	0	140.8	0
S1:C9	R1:Footing	Roof Live	0	0	2067.5	0
S1:C9	R1:Footing	Snow	0	0	1654.2	0
S1:C9	R1:Footing	Wind (E+)	0	0	-235.9	0
S1:C9	R1:Footing	Wind (E-)	0	0	-961.3	0
S1:C9	R1:Footing	Wind (P)	0	7.2	-235.9	104.2
S1:C9	R1:Footing	Wind (S)	0	-7.2	-993.8	-104.2
S1:C9	R2:Diaph.	Wind (P)	174	-7.2	0	0
S1:C9	R2:Diaph.	Wind (S)	174	7.2	0	0
S2:C3	R1:Footing	Dead	0	0	16726.3	0
S2:C3	R1:Footing	DL (Self Wt)	0	0	513.1	0
S2:C3	R1:Footing	Roof Live	0	0	12554.8	0
S2:C3	R1:Footing	Snow	0	0	11100.6	0
S2:C3	R1:Footing	Wind (E+)	0	-122.4	-3344.2	-566.6
S2:C3	R1:Footing	Wind (P)	0	145.5	-4732.1	843.3
S2:C3	R1:Footing	Wind (S)	0	-124	-7171.9	-743.7
S2:C3	R2:Diaph.	Wind (E+)	174	-358.8	0	0
S2:C3	R2:Diaph.	Wind (P)	174	358.9	0	0
S2:C3	R2:Diaph.	Wind (S)	174	-295.8	0	0
S2:C5	R1:Footing	Dead	0	0	22125	0

S2:C5	R1:Footing	DL (Self Wt)	0	0	865	0
S2:C5	R1:Footing	Roof Live	0	0	15863.1	0
S2:C5	R1:Footing	Snow	0	0	14749.6	0
S2:C5	R1:Footing	Wind (E+)	0	-122.4	-3351.1	-566.9
S2:C5	R1:Footing	Wind (P)	0	151.5	-6752.2	932
S2:C5	R1:Footing	Wind (S)	0	-130.1	-9527.7	-832.6
S2:C5	R2:Diaph.	Wind (E+)	174	-359.5	0	0
S2:C5	R2:Diaph.	Wind (P)	174	353.4	0	0
S2:C5	R2:Diaph.	Wind (S)	174	-290.3	0	0
S2:C9	R1:Footing	Dead	0	0	8451.8	0
S2:C9	R1:Footing	DL (Self Wt)	0	0	473.4	0
S2:C9	R1:Footing	Roof Live	0	0	5371.8	0
S2:C9	R1:Footing	Snow	0	0	5344.2	0
S2:C9	R1:Footing	Wind (E+)	0	0	-2288.6	0
S2:C9	R1:Footing	Wind (E-)	0	0	-3344.4	0
S2:C9	R1:Footing	Wind (P)	0	4.2	-2288.6	60.8
S2:C9	R1:Footing	Wind (S)	0	-4.2	-3376.9	-60.8
S2:C9	R2:Diaph.	Wind (P)	174	-4.2	0	0
S2:C9	R2:Diaph.	Wind (S)	174	4.2	0	0
T1	R1:Col/Hdr	Dead	0	0	7773.6	0
T1	R1:Col/Hdr	Roof Live	0	0	6603.4	0
T1	R1:Col/Hdr	Snow	0	0	5283	0
T1	R1:Col/Hdr	Unb. Snow (WFL)	0	0	2929.3	0
T1	R1:Col/Hdr	Unb. Snow (WFR)	0	0	5028.9	0
T1	R1:Col/Hdr	Wind (P)	0	0	-3351.1	0
T1	R1:Col/Hdr	Wind (S)	0	0	-2680.9	0
T1	R2:Col/Hdr	Dead	606	0	7773.6	0
T1	R2:Col/Hdr	Roof Live	606	0	6603.4	0
T1	R2:Col/Hdr	Snow	606	0	5283	0
T1	R2:Col/Hdr	Unb. Snow (WFL)	606	0	5028.9	0
T1	R2:Col/Hdr	Unb. Snow (WFR)	606	0	2929.3	0
T1	R2:Col/Hdr	Wind (P)	606	0	-2680.9	0
T1	R2:Col/Hdr	Wind (S)	606	0	-3351.1	0
L1.E1:C2	R1:Footing	Dead	0	0	2287	0
L1.E1:C2	R1:Footing	DL (Self Wt)	0	0	93.4	0
L1.E1:C2	R1:Footing	Roof Live	0	0	1295	0
L1.E1:C2	R1:Footing	Snow	0	0	1036	0
L1.E1:C2	R1:Footing	Wind (P)	0	936.9	20.7	2300.4
L1.E1:C2	R1:Footing	Wind (S)	0	-844.7	-485.9	-2074.5
L1.E1:C2	R2:Diaph.	Wind (P)	143	450.4	0	0
L1.E1:C2	R2:Diaph.	Wind (S)	143	-406.2	0	0
L1.E1:C2	R3:Diaph.	Wind (P)	118	154.2	0	0
L1.E1:C2	R3:Diaph.	Wind (S)	118	-139	0	0

L1.E1:GW4	R1:Column	Wind (P)	0	-150.7	0	0
L1.E1:GW4	R2:Column	Wind (P)	113	-150.7	0	0
L1.E2:C2	R1:Footing	Dead	0	0	2341	0
L1.E2:C2	R1:Footing	DL (Self Wt)	0	0	93.4	0
L1.E2:C2	R1:Footing	Roof Live	0	0	1340	0
L1.E2:C2	R1:Footing	Snow	0	0	1072	0
L1.E2:C2	R1:Footing	Wind (P)	0	936.9	21.4	2300.4
L1.E2:C2	R1:Footing	Wind (S)	0	-844.7	-502.8	-2074.5
L1.E2:C2	R2:Diaph.	Wind (P)	143	450.4	0	0
L1.E2:C2	R2:Diaph.	Wind (S)	143	-406.2	0	0
L1.E2:C2	R3:Diaph.	Wind (P)	118	154.2	0	0
L1.E2:C2	R3:Diaph.	Wind (S)	118	-139	0	0
L1.S1:C1 (Typ)	R1:Footing	Dead	0	0	1434.6	0
L1.S1:C1 (Typ)	R1:Footing	DL (Self Wt)	0	0	63.4	0
L1.S1:C1 (Typ)	R1:Footing	Roof Live	0	0	638	0
L1.S1:C1 (Typ)	R1:Footing	Snow	0	0	510.4	0
L1.S1:C1 (Typ)	R1:Footing	Wind (S)	0	0	-239.4	0
L1.S1:C2 (Typ)	R1:Footing	Dead	0	0	3419.6	0
L1.S1:C2 (Typ)	R1:Footing	DL (Self Wt)	0	0	63.4	0
L1.S1:C2 (Typ)	R1:Footing	Roof Live	0	0	2575.7	0
L1.S1:C2 (Typ)	R1:Footing	Snow	0	0	2060.7	0
L1.S1:C2 (Typ)	R1:Footing	Wind (P)	0	612.5	0	1195.6
L1.S1:C2 (Typ)	R1:Footing	Wind (S)	0	-519.7	-1296.7	-928.5
L1.S1:C2 (Typ)	R2:Footing	Wind (P)	0	472.7	0	0
L1.S1:C2 (Typ)	R2:Footing	Wind (S)	0	-970.2	0	0
L1.S1:GW1	R1:Column	Wind (P)	0	-156.3	0	0
L1.S1:GW1	R2:Column	Wind (P)	117.25	-156.3	0	0
L1:S1:CJ	R1:Truss BC	Dead	0	0	151.9	0
L1:S1:CJ	R1:Truss BC	Wind (P)	0	0	50.6	0
L1:S1:CJ	R2:Truss BC	Dead	121.5	0	151.9	0
L1:S1:CJ	R2:Truss BC	Wind (P)	121.5	0	50.6	0
L1:S1:P1	R1:Rafter	Dead	0	0	151.9	0
L1:S1:P1	R1:Rafter	Roof Live	0	0	253.1	0
L1:S1:P1	R1:Rafter	Snow	0	0	202.5	0
L1:S1:P1	R1:Rafter	Wind (P)	0	0	89.7	0
L1:S1:P1	R1:Rafter	Wind (S)	0	0	-258.5	0

L1:S1:P1	R2:Rafter	Dead	121.5	0	151.9	0
L1:S1:P1	R2:Rafter	Roof Live	121.5	0	253.1	0
L1:S1:P1	R2:Rafter	Snow	121.5	0	202.5	0
L1:S1:P1	R2:Rafter	Wind (P)	121.5	0	89.7	0
L1:S1:P1	R2:Rafter	Wind (S)	121.5	0	-258.5	0
L1:S1:T1	R1:Col/Hdr	Dead	0	0	3091	0
L1:S1:T1	R1:Col/Hdr	Dead	0	0	3091	0
L1:S1:T1	R1:Col/Hdr	Roof Live	0	0	2575.7	0
L1:S1:T1	R1:Col/Hdr	Roof Live	0	0	2575.7	0
L1:S1:T1	R1:Col/Hdr	Snow	0	0	2060.7	0
L1:S1:T1	R1:Col/Hdr	Snow	0	0	2060.7	0
L1:S1:T1	R1:Col/Hdr	Wind (S)	0	454	-1296.7	0
L1:S1:T1	R1:Col/Hdr	Wind (S)	0	454	-1296.7	0
L1:S1:T1	R2:Col/Hdr	Dead	243.25	0	3161.8	0
L1:S1:T1	R2:Col/Hdr	Dead	243.25	0	3161.8	0
L1:S1:T1	R2:Col/Hdr	Roof Live	243.25	0	2634.5	0
L1:S1:T1	R2:Col/Hdr	Roof Live	243.25	0	2634.5	0
L1:S1:T1	R2:Col/Hdr	Snow	243.25	0	2107.7	0
L1:S1:T1	R2:Col/Hdr	Snow	243.25	0	2107.7	0
L1:S1:T1	R2:Col/Hdr	Wind (S)	243.25	0	-1427.1	0
L1:S1:T1	R2:Col/Hdr	Wind (S)	243.25	0	-1427.1	0
L1:S1:TG1	R1:Unk.	Dead	0	0	1558.1	0
L1:S1:TG1	R1:Unk.	Dead	0	0	1558.1	0
L1:S1:TG1	R1:Unk.	Roof Live	0	0	1298.4	0
L1:S1:TG1	R1:Unk.	Roof Live	0	0	1298.4	0
L1:S1:TG1	R1:Unk.	Snow	0	0	1038.7	0
L1:S1:TG1	R1:Unk.	Snow	0	0	1038.7	0
L1:S1:TG1	R1:Unk.	Wind (S)	0	228.8	-654.7	0
L1:S1:TG1	R1:Unk.	Wind (S)	0	228.8	-654.7	0
L1:S1:TG1	R2:Unk.	Dead	243.25	0	1593.8	0
L1:S1:TG1	R2:Unk.	Dead	243.25	0	1593.8	0
L1:S1:TG1	R2:Unk.	Roof Live	243.25	0	1328.2	0
L1:S1:TG1	R2:Unk.	Roof Live	243.25	0	1328.2	0
L1:S1:TG1	R2:Unk.	Snow	243.25	0	1062.3	0
L1:S1:TG1	R2:Unk.	Snow	243.25	0	1062.3	0
L1:S1:TG1	R2:Unk.	Wind (S)	243.25	0	-718.7	0
L1:S1:TG1	R2:Unk.	Wind (S)	243.25	0	-718.7	0
L1:S1:TG2	R1:Unk.	Dead	0	0	1532.8	0
L1:S1:TG2	R1:Unk.	Dead	0	0	1532.8	0
L1:S1:TG2	R1:Unk.	Roof Live	0	0	1277.3	0
L1:S1:TG2	R1:Unk.	Roof Live	0	0	1277.3	0
L1:S1:TG2	R1:Unk.	Snow	0	0	1021.8	0
L1:S1:TG2	R1:Unk.	Snow	0	0	1021.8	0
L1:S1:TG2	R1:Unk.	Wind (S)	0	225.2	-644.1	0
L1:S1:TG2	R1:Unk.	Wind (S)	0	225.2	-644.1	0
L1:S1:TG2	R2:Unk.	Dead	243.25	0	1568.1	0
L1:S1:TG2	R2:Unk.	Dead	243.25	0	1568.1	0
L1:S1:TG2	R2:Unk.	Roof Live	243.25	0	1306.5	0
L1:S1:TG2	R2:Unk.	Roof Live	243.25	0	1306.5	0
L1:S1:TG2	R2:Unk.	Snow	243.25	0	1045.4	0
L1:S1:TG2	R2:Unk.	Snow	243.25	0	1045.4	0
L1:S1:TG2	R2:Unk.	Wind (S)	243.25	0	-707.1	0
L1:S1:TG2	R2:Unk.	Wind (S)	243.25	0	-707.1	0

L2:S2:CJ	R1:Truss BC	Dead	0	0	155.6	0
L2:S2:CJ	R1:Truss BC	Wind (P)	0	0	51.9	0
L2:S2:CJ	R2:Truss BC	Dead	124.5	0	155.6	0
L2:S2:CJ	R2:Truss BC	Wind (P)	124.5	0	51.9	0
L2:S2:P1	R1:Rafter	Dead	0	0	155.6	0
L2:S2:P1	R1:Rafter	Roof Live	0	0	259.4	0
L2:S2:P1	R1:Rafter	Snow	0	0	207.5	0
L2:S2:P1	R1:Rafter	Wind (P)	0	0	91.9	0
L2:S2:P1	R1:Rafter	Wind (S)	0	0	-264.9	0
L2:S2:P1	R2:Rafter	Dead	124.5	0	155.6	0
L2:S2:P1	R2:Rafter	Roof Live	124.5	0	259.4	0
L2:S2:P1	R2:Rafter	Snow	124.5	0	207.5	0
L2:S2:P1	R2:Rafter	Wind (P)	124.5	0	91.9	0
L2:S2:P1	R2:Rafter	Wind (S)	124.5	0	-264.9	0
L2:S2:T1	R1:Col/Hdr	Dead	0	0	3116.4	0
L2:S2:T1	R1:Col/Hdr	Dead	0	0	3116.4	0
L2:S2:T1	R1:Col/Hdr	Roof Live	0	0	2596.9	0
L2:S2:T1	R1:Col/Hdr	Roof Live	0	0	2596.9	0
L2:S2:T1	R1:Col/Hdr	Snow	0	0	2077.5	0
L2:S2:T1	R1:Col/Hdr	Snow	0	0	2077.5	0
L2:S2:T1	R1:Col/Hdr	Wind (S)	0	457.6	-1311.1	0
L2:S2:T1	R1:Col/Hdr	Wind (S)	0	457.6	-1311.1	0
L2:S2:T1	R2:Col/Hdr	Dead	243.25	0	3187.6	0
L2:S2:T1	R2:Col/Hdr	Dead	243.25	0	3187.6	0
L2:S2:T1	R2:Col/Hdr	Roof Live	243.25	0	2656.3	0
L2:S2:T1	R2:Col/Hdr	Roof Live	243.25	0	2656.3	0
L2:S2:T1	R2:Col/Hdr	Snow	243.25	0	2124.9	0
L2:S2:T1	R2:Col/Hdr	Snow	243.25	0	2124.9	0
L2:S2:T1	R2:Col/Hdr	Wind (S)	243.25	0	-1435.1	0
L2:S2:T1	R2:Col/Hdr	Wind (S)	243.25	0	-1435.1	0
L2:S2:TG1	R1:Unk.	Dead	0	0	1520.2	0
L2:S2:TG1	R1:Unk.	Dead	0	0	1520.2	0
L2:S2:TG1	R1:Unk.	Roof Live	0	0	1266.7	0
L2:S2:TG1	R1:Unk.	Roof Live	0	0	1266.7	0
L2:S2:TG1	R1:Unk.	Snow	0	0	1013.4	0
L2:S2:TG1	R1:Unk.	Snow	0	0	1013.4	0
L2:S2:TG1	R1:Unk.	Wind (S)	0	223.4	-638.6	0
L2:S2:TG1	R1:Unk.	Wind (S)	0	223.4	-638.6	0
L2:S2:TG1	R2:Unk.	Dead	243.25	0	1555	0
L2:S2:TG1	R2:Unk.	Dead	243.25	0	1555	0
L2:S2:TG1	R2:Unk.	Roof Live	243.25	0	1295.7	0
L2:S2:TG1	R2:Unk.	Roof Live	243.25	0	1295.7	0
L2:S2:TG1	R2:Unk.	Snow	243.25	0	1036.6	0
L2:S2:TG1	R2:Unk.	Snow	243.25	0	1036.6	0
L2:S2:TG1	R2:Unk.	Wind (S)	243.25	0	-701	0
L2:S2:TG1	R2:Unk.	Wind (S)	243.25	0	-701	0
L2:S2:TG2	R1:Unk.	Dead	0	0	1520.2	0
L2:S2:TG2	R1:Unk.	Dead	0	0	1520.2	0
L2:S2:TG2	R1:Unk.	Roof Live	0	0	1266.7	0
L2:S2:TG2	R1:Unk.	Roof Live	0	0	1266.7	0
L2:S2:TG2	R1:Unk.	Snow	0	0	1013.4	0

L2:S2:TG2	R1:Unk.	Snow	0	0	1013.4	0
L2:S2:TG2	R1:Unk.	Wind (S)	0	223.4	-638.6	0
L2:S2:TG2	R1:Unk.	Wind (S)	0	223.4	-638.6	0
L2:S2:TG2	R2:Unk.	Dead	243.25	0	1555	0
L2:S2:TG2	R2:Unk.	Dead	243.25	0	1555	0
L2:S2:TG2	R2:Unk.	Roof Live	243.25	0	1295.7	0
L2:S2:TG2	R2:Unk.	Roof Live	243.25	0	1295.7	0
L2:S2:TG2	R2:Unk.	Snow	243.25	0	1036.6	0
L2:S2:TG2	R2:Unk.	Snow	243.25	0	1036.6	0
L2:S2:TG2	R2:Unk.	Wind (S)	243.25	0	-701	0
L2:S2:TG2	R2:Unk.	Wind (S)	243.25	0	-701	0
L2.E1:C2	R1:Footing	Dead	0	0	2287	0
L2.E1:C2	R1:Footing	DL (Self Wt)	0	0	93.4	0
L2.E1:C2	R1:Footing	Roof Live	0	0	1295	0
L2.E1:C2	R1:Footing	Snow	0	0	1036	0
L2.E1:C2	R1:Footing	Wind (P)	0	936.9	20.7	2300.4
L2.E1:C2	R1:Footing	Wind (S)	0	-844.7	-485.9	-2074.5
L2.E1:C2	R2:Diaph.	Wind (P)	143	450.4	0	0
L2.E1:C2	R2:Diaph.	Wind (S)	143	-406.2	0	0
L2.E1:C2	R3:Diaph.	Wind (P)	118	154.2	0	0
L2.E1:C2	R3:Diaph.	Wind (S)	118	-139	0	0
L2.E1:GW5	R1:Column	Wind (P)	0	-150.7	0	0
L2.E1:GW5	R2:Column	Wind (P)	113	-150.7	0	0
L2.E2:C2	R1:Footing	Dead	0	0	2341	0
L2.E2:C2	R1:Footing	DL (Self Wt)	0	0	93.4	0
L2.E2:C2	R1:Footing	Roof Live	0	0	1340	0
L2.E2:C2	R1:Footing	Snow	0	0	1072	0
L2.E2:C2	R1:Footing	Wind (P)	0	936.9	21.4	2300.4
L2.E2:C2	R1:Footing	Wind (S)	0	-844.7	-502.8	-2074.5
L2.E2:C2	R2:Diaph.	Wind (P)	143	450.4	0	0
L2.E2:C2	R2:Diaph.	Wind (S)	143	-406.2	0	0
L2.E2:C2	R3:Diaph.	Wind (P)	118	154.2	0	0
L2.E2:C2	R3:Diaph.	Wind (S)	118	-139	0	0
L2.S1:C1 (Typ)	R1:Footing	Dead	0	0	1434.6	0
L2.S1:C1 (Typ)	R1:Footing	DL (Self Wt)	0	0	63.4	0
L2.S1:C1 (Typ)	R1:Footing	Roof Live	0	0	638	0
L2.S1:C1 (Typ)	R1:Footing	Snow	0	0	510.4	0
L2.S1:C1 (Typ)	R1:Footing	Wind (S)	0	0	-239.4	0
L2.S1:C2 (Typ)	R1:Footing	Dead	0	0	3447.6	0
L2.S1:C2 (Typ)	R1:Footing	DL (Self Wt)	0	0	63.4	0
L2.S1:C2 (Typ)	R1:Footing	Roof Live	0	0	2596.9	0

L2.S1:C2 (Typ)	R1:Footing	Snow	0	0	2077.5	0
L2.S1:C2 (Typ)	R1:Footing	Wind (P)	0	617.5	0	1205.4
L2.S1:C2 (Typ)	R1:Footing	Wind (S)	0	-524	-1311.1	-936.2
L2.S1:C2 (Typ)	R2:Footing	Wind (P)	0	476.6	0	0
L2.S1:C2 (Typ)	R2:Footing	Wind (S)	0	-978.1	0	0
L2.S1:GW1	R1:Column	Wind (P)	0	-162.7	0	0
L2.S1:GW1	R2:Column	Wind (P)	122	-162.7	0	0

Combined Reactions

Member ID	Reaction Member ID	Load Combination	Maximum Horizontal Reaction (lb)	Maximum Vertical Reaction (lb)	Maximum Moment Reaction (ft lb)	Connection Type
CJ1	R1:Truss BC	D	0	148.4	0	
CJ1	R2:Truss BC	D	0	148.4	0	
E1:C2	R1:Footing	.6D+Wp	739.1	1231.5	2103.8	
E1:C2	R1:Footing	.6D+Ws	-801.8	954.1	-2274.6	
E1:C2	R1:Footing	D+Lr	0	3908.3	0	
E1:C2	R2:Diaph.	.6D+Wp	-92.1	0	0	
E1:C2	R2:Diaph.	.6D+Ws	102.5	0	0	
E1:C2	R3:Diaph.	.6D+Wp	850.6	0	0	
E1:C2	R3:Diaph.	.6D+Ws	-927.7	0	0	
E1:C3	R1:Footing	.6D+Wp	754.6	1367.2	2145.7	
E1:C3	R1:Footing	.6D+Ws	-818.5	1082.8	-2319.6	
E1:C3	R1:Footing	D+Lr	0	4174	0	
E1:C3	R2:Diaph.	.6D+Wp	116.1	0	0	
E1:C3	R2:Diaph.	.6D+Ws	-124.9	0	0	
E1:C3	R3:Diaph.	.6D+Wp	890.3	0	0	
E1:C3	R3:Diaph.	.6D+Ws	-969.3	0	0	
FH:S1:D4	R1:Column	.6D+Wp	0	113.3	0	
FH:S1:D4	R1:Column	.6D+Ws	0	-94.3	0	
FH:S1:D4	R2:Column	.6D+Wp	0	113.3	0	
FH:S1:D4	R2:Column	.6D+Ws	0	-94.3	0	
FH:S1:D5	R1:Column	.6D+Wp	0	112.4	0	
FH:S1:D5	R1:Column	.6D+Ws	0	-93.5	0	
FH:S1:D5	R2:Column	.6D+Wp	0	112.4	0	
FH:S1:D5	R2:Column	.6D+Ws	0	-93.5	0	
FH:S2:D9	R1:Column	.6D+Wp	0	113.3	0	
FH:S2:D9	R1:Column	.6D+Ws	0	-94.3	0	
FH:S2:D9	R2:Column	.6D+Wp	0	113.3	0	
FH:S2:D9	R2:Column	.6D+Ws	0	-94.3	0	
GW1	R1:Column	.6D+Wp	-171	0	0	
GW1	R2:Column	.6D+Wp	-171	0	0	
GW2	R1:Column	.6D+Wp	-170.3	0	0	

GW2	R2:Column	.6D+Wp	-170.3	0	0	
GW3	R1:Column	.6D+Wp	-180.8	0	0	
GW3	R2:Column	.6D+Wp	-180.8	0	0	
H:S1:D3	R1:Column	D+S	0	19141.2	0	
H:S1:D3	R2:Column	D+S	0	19169.1	0	
H:S2:D6	R1:Column	D+S	0	9506.9	0	
H:S2:D6	R2:Column	D+S	0	9379.3	0	
H:S2:D7	R1:Column	D+S	0	9470.8	0	
H:S2:D7	R2:Column	D+S	0	9544.9	0	
H:S2:D8	R1:Column	D+S	0	9429.5	0	
H:S2:D8	R2:Column	D+S	0	9493.6	0	
PR1	R1:Truss	.6D+Ws	0	-166.5	0	
PR1	R1:Truss	D+.75(Wp+Lr)	0	400.5	0	
PR1	R2:Truss	.6D+Ws	0	-166.5	0	
PR1	R2:Truss	D+.75(Wp+Lr)	0	400.5	0	
PR1 UnbSnow	R1:Truss	.6D+Ws	0	-166.5	0	
PR1 UnbSnow	R1:Truss	.6D+Ws	0	-166.5	0	
PR1 UnbSnow	R1:Truss	D+S	0	476.9	0	
PR1 UnbSnow	R1:Truss	D+S	0	476.9	0	
PR1 UnbSnow	R2:Truss	.6D+Ws	0	-166.5	0	
PR1 UnbSnow	R2:Truss	.6D+Ws	0	-166.5	0	
PR1 UnbSnow	R2:Truss	D+S	0	476.9	0	
PR1 UnbSnow	R2:Truss	D+S	0	476.9	0	
S1:C1 (Typ)	R1:Footing	D+Lr	0	2536.8	0	
S1:C2 (Typ)	R1:Footing	.6D+W(E+)	866.1	2120.5	-2517.8	
S1:C2 (Typ)	R1:Footing	.6D+W(L-)	-912.6	3620.1	2707.3	
S1:C2 (Typ)	R1:Footing	D+Lr	15.5	15404.4	-222.8	
S1:C4	R1:Footing	.6D+W(E+)	-498.5	2736.6	-1551.3	
S1:C4	R1:Footing	.6D+Wp	532.3	3406.8	1769.8	
S1:C4	R1:Footing	D+Lr	0	18002	0	
S1:C4	R2:Diaph.	.6D+W(E+)	-441.7	0	0	
S1:C4	R2:Diaph.	.6D+Wp	453	0	0	
S1:C5	R1:Footing	.6D+Wp	208.7	7698.4	1761.3	
S1:C5	R1:Footing	.6D+Ws	-187.3	4932.2	-1661.9	
S1:C5	R1:Footing	D+Lr	0	39138.9	0	
S1:C5	R2:Diaph.	.6D+W(E+)	-359.5	0	0	
S1:C5	R2:Diaph.	.6D+Wp	296.2	0	0	

S1:C8	R1:Footing	.6D+Wp	178.7	7709.2	1323.9	
S1:C8	R1:Footing	.6D+Ws	-157.2	4939.6	-1224.3	
S1:C8	R1:Footing	D+Lr	0	39215.2	0	
S1:C8	R2:Diaph.	.6D+W(E+)	-360.6	0	0	
S1:C8	R2:Diaph.	.6D+Wp	327.7	0	0	
S1:C9	R1:Footing	.6D+Wp	7.2	1700.3	104.2	
S1:C9	R1:Footing	.6D+Ws	-7.2	942.4	-104.2	
S1:C9	R1:Footing	D+Lr	0	5200.6	0	
S1:C9	R2:Diaph.	.6D+Wp	-7.2	0	0	
S1:C9	R2:Diaph.	.6D+Ws	7.2	0	0	
S2:C3	R1:Footing	.6D+Wp	145.5	5816.8	843.4	
S2:C3	R1:Footing	.6D+Ws	-124	3377	-743.7	
S2:C3	R1:Footing	D+Lr	0	29794.2	0	
S2:C3	R2:Diaph.	.6D+W(E+)	-358.8	0	0	
S2:C3	R2:Diaph.	.6D+Wp	358.9	0	0	
S2:C5	R1:Footing	.6D+Wp	151.5	7387.8	932	
S2:C5	R1:Footing	.6D+Ws	-130.1	4612.3	-832.6	
S2:C5	R1:Footing	D+Lr	0	38853.1	0	
S2:C5	R2:Diaph.	.6D+W(E+)	-359.5	0	0	
S2:C5	R2:Diaph.	.6D+Wp	353.4	0	0	
S2:C9	R1:Footing	.6D+Wp	4.2	3255.9	60.8	
S2:C9	R1:Footing	.6D+Ws	-4.2	2167.6	-60.8	
S2:C9	R1:Footing	D+Lr	0	14297	0	
S2:C9	R2:Diaph.	.6D+Wp	-4.2	0	0	
S2:C9	R2:Diaph.	.6D+Ws	4.2	0	0	
T1	R1:Col/Hdr	D+Lr	0	14377	0	
T1	R2:Col/Hdr	D+Lr	0	14377	0	
L1.E1:C2	R1:Footing	.6D+Wp	936.9	1486.3	2300.4	
L1.E1:C2	R1:Footing	.6D+Ws	-844.7	979.7	-2074.5	
L1.E1:C2	R1:Footing	D+Lr	0	3675.4	0	
L1.E1:C2	R2:Diaph.	.6D+Wp	450.4	0	0	
L1.E1:C2	R2:Diaph.	.6D+Ws	-406.2	0	0	
L1.E1:C2	R3:Diaph.	.6D+Wp	154.2	0	0	
L1.E1:C2	R3:Diaph.	.6D+Ws	-139	0	0	
L1.E1:GW4	R1:Column	.6D+Wp	-150.7	0	0	
L1.E1:GW4	R2:Column	.6D+Wp	-150.7	0	0	
L1.E2:C2	R1:Footing	.6D+Wp	936.9	1519.4	2300.4	
L1.E2:C2	R1:Footing	.6D+Ws	-844.7	995.2	-2074.5	
L1.E2:C2	R1:Footing	D+Lr	0	3774.4	0	
L1.E2:C2	R2:Diaph.	.6D+Wp	450.4	0	0	
L1.E2:C2	R2:Diaph.	.6D+Ws	-406.2	0	0	
L1.E2:C2	R3:Diaph.	.6D+Wp	154.2	0	0	
L1.E2:C2	R3:Diaph.	.6D+Ws	-139	0	0	
L1.S1:C1 (Typ)	R1:Footing	D+Lr	0	2136	0	
L1.S1:C2 (Typ)	R1:Footing	.6D+Wp	612.5	2115.2	1195.6	

L1.S1:C2 (Typ)	R1:Footing	.6D+Ws	-519.7	818.5	-928.5	
L1.S1:C2 (Typ)	R1:Footing	D+Lr	0	6058.7	0	
L1.S1:C2 (Typ)	R2:Footing	.6D+Wp	472.7	0	0	
L1.S1:C2 (Typ)	R2:Footing	.6D+Ws	-970.2	0	0	
L1.S1:GW1	R1:Column	.6D+Wp	-156.3	0	0	
L1.S1:GW1	R2:Column	.6D+Wp	-156.3	0	0	
L1:S1:CJ	R1:Truss BC	D	0	151.9	0	
L1:S1:CJ	R2:Truss BC	D	0	151.9	0	
L1:S1:P1	R1:Rafter	.6D+Ws	0	-167.4	0	
L1:S1:P1	R1:Rafter	D+.75(Wp+Lr)	0	409	0	
L1:S1:P1	R2:Rafter	.6D+Ws	0	-167.4	0	
L1:S1:P1	R2:Rafter	D+.75(Wp+Lr)	0	409	0	
L1:S1:T1	R1:Col/Hdr	.6D+Ws	454	557.9	0	
L1:S1:T1	R1:Col/Hdr	.6D+Ws	454	557.9	0	
L1:S1:T1	R1:Col/Hdr	D+Lr	0	5666.7	0	
L1:S1:T1	R1:Col/Hdr	D+Lr	0	5666.7	0	
L1:S1:T1	R2:Col/Hdr	D+Lr	0	5796.3	0	
L1:S1:T1	R2:Col/Hdr	D+Lr	0	5796.3	0	
L1:S1:TG1	R1:Unk.	.6D+Ws	228.8	280.2	0	
L1:S1:TG1	R1:Unk.	.6D+Ws	228.8	280.2	0	
L1:S1:TG1	R1:Unk.	D+Lr	0	2856.5	0	
L1:S1:TG1	R1:Unk.	D+Lr	0	2856.5	0	
L1:S1:TG1	R2:Unk.	D+Lr	0	2922	0	
L1:S1:TG1	R2:Unk.	D+Lr	0	2922	0	
L1:S1:TG2	R1:Unk.	.6D+Ws	225.2	275.6	0	
L1:S1:TG2	R1:Unk.	.6D+Ws	225.2	275.6	0	
L1:S1:TG2	R1:Unk.	D+Lr	0	2810.1	0	
L1:S1:TG2	R1:Unk.	D+Lr	0	2810.1	0	
L1:S1:TG2	R2:Unk.	D+Lr	0	2874.6	0	
L1:S1:TG2	R2:Unk.	D+Lr	0	2874.6	0	
L2:S2:CJ	R1:Truss BC	D	0	155.6	0	
L2:S2:CJ	R2:Truss BC	D	0	155.6	0	
L2:S2:P1	R1:Rafter	.6D+Ws	0	-171.5	0	
L2:S2:P1	R1:Rafter	D+.75(Wp+Lr)	0	419.1	0	
L2:S2:P1	R2:Rafter	.6D+Ws	0	-171.5	0	
L2:S2:P1	R2:Rafter	D+.75(Wp+Lr)	0	419.1	0	
L2:S2:T1	R1:Col/Hdr	.6D+Ws	457.6	558.7	0	
L2:S2:T1	R1:Col/Hdr	.6D+Ws	457.6	558.7	0	
L2:S2:T1	R1:Col/Hdr	D+Lr	0	5713.3	0	
L2:S2:T1	R1:Col/Hdr	D+Lr	0	5713.3	0	
L2:S2:T1	R2:Col/Hdr	D+Lr	0	5843.9	0	
L2:S2:T1	R2:Col/Hdr	D+Lr	0	5843.9	0	
L2:S2:TG1	R1:Unk.	.6D+Ws	223.4	273.5	0	

L2:S2:TG1	R1:Unk.	.6D+Ws	223.4	273.5	0	
L2:S2:TG1	R1:Unk.	D+Lr	0	2786.9	0	
L2:S2:TG1	R1:Unk.	D+Lr	0	2786.9	0	
L2:S2:TG1	R2:Unk.	D+Lr	0	2850.7	0	
L2:S2:TG1	R2:Unk.	D+Lr	0	2850.7	0	
L2:S2:TG2	R1:Unk.	.6D+Ws	223.4	273.5	0	
L2:S2:TG2	R1:Unk.	.6D+Ws	223.4	273.5	0	
L2:S2:TG2	R1:Unk.	D+Lr	0	2786.9	0	
L2:S2:TG2	R1:Unk.	D+Lr	0	2786.9	0	
L2:S2:TG2	R2:Unk.	D+Lr	0	2850.7	0	
L2:S2:TG2	R2:Unk.	D+Lr	0	2850.7	0	
L2.E1:C2	R1:Footing	.6D+Wp	936.9	1486.3	2300.4	
L2.E1:C2	R1:Footing	.6D+Ws	-844.7	979.7	-2074.5	
L2.E1:C2	R1:Footing	D+Lr	0	3675.4	0	
L2.E1:C2	R2:Diaph.	.6D+Wp	450.4	0	0	
L2.E1:C2	R2:Diaph.	.6D+Ws	-406.2	0	0	
L2.E1:C2	R3:Diaph.	.6D+Wp	154.2	0	0	
L2.E1:C2	R3:Diaph.	.6D+Ws	-139	0	0	
L2.E1:GW5	R1:Column	.6D+Wp	-150.7	0	0	
L2.E1:GW5	R2:Column	.6D+Wp	-150.7	0	0	
L2.E2:C2	R1:Footing	.6D+Wp	936.9	1519.4	2300.4	
L2.E2:C2	R1:Footing	.6D+Ws	-844.7	995.2	-2074.5	
L2.E2:C2	R1:Footing	D+Lr	0	3774.4	0	
L2.E2:C2	R2:Diaph.	.6D+Wp	450.4	0	0	
L2.E2:C2	R2:Diaph.	.6D+Ws	-406.2	0	0	
L2.E2:C2	R3:Diaph.	.6D+Wp	154.2	0	0	
L2.E2:C2	R3:Diaph.	.6D+Ws	-139	0	0	
L2.S1:C1 (Typ)	R1:Footing	D+Lr	0	2136	0	
L2.S1:C2 (Typ)	R1:Footing	.6D+Wp	617.5	2132	1205.4	
L2.S1:C2 (Typ)	R1:Footing	.6D+Ws	-524	820.9	-936.2	
L2.S1:C2 (Typ)	R1:Footing	D+Lr	0	6107.9	0	
L2.S1:C2 (Typ)	R2:Footing	.6D+Wp	476.6	0	0	
L2.S1:C2 (Typ)	R2:Footing	.6D+Ws	-978.1	0	0	
L2.S1:GW1	R1:Column	.6D+Wp	-162.7	0	0	
L2.S1:GW1	R2:Column	.6D+Wp	-162.7	0	0	

Messages	
Category	**Description**
OOB Internal	Bay width for minor opening framing bundles could not be determined for the following openings. Please verify the BOM. Openings: 12 13 14 22
OOB Internal	Purlin Design was checked and is adequate for Unbalanced Snow Surcharge at 24 in spacing.
OOB Internal	Query of window frame kits for opening 1 Airballed. Have BOMmed the biggest bundle available instead.

Messages	
OOB Internal	Query of window frame kits for opening 10 Airballed. Have BOMmed the biggest bundle available instead.
OOB Internal	Query of window frame kits for opening 13 Airballed. Have BOMmed the biggest bundle available instead.
OOB Internal	Query of window frame kits for opening 14 Airballed. Have BOMmed the biggest bundle available instead.
OOB Internal	Query of window frame kits for opening 15 Airballed. Have BOMmed the biggest bundle available instead.
OOB Internal	Query of window frame kits for opening 16 Airballed. Have BOMmed the biggest bundle available instead.
OOB Internal	Query of window frame kits for opening 17 Airballed. Have BOMmed the biggest bundle available instead.
OOB Internal	Query of window frame kits for opening 18 Airballed. Have BOMmed the biggest bundle available instead.
OOB Internal	Query of window frame kits for opening 19 Airballed. Have BOMmed the biggest bundle available instead.
OOB Internal	Query of window frame kits for opening 2 Airballed. Have BOMmed the biggest bundle available instead.
OOB Internal	Query of window frame kits for opening 20 Airballed. Have BOMmed the biggest bundle available instead.
OOB Internal	Standard trim could not be found for the S1 ClearOpening Front. The part number for a custom trim has been BOMd. The EST will need to determine the custom part needed.
OOB Internal	Standard trim could not be found for the S2 ClearOpening Front. The part number for a custom trim has been BOMd. The EST will need to determine the custom part needed.
OOB Internal	The length required for the Clg Nailer is longer than the longest lumber available. It will be broken into smaller pieces. Please review the lengths BOMd and notify the developers if incorrect.
OOB Internal	The length required for the False Hdr OS Ply C is longer than the longest lumber available. It will be broken into smaller pieces. Please review the lengths BOMd and notify the developers if incorrect.
OOB Internal	The length required for the Roof Trans Btm Girt is longer than the longest lumber available. It will be broken into smaller pieces. Please review the lengths BOMd and notify the developers if incorrect.
OOB Internal	The length required for the Roof Trans Rafter Blkg is longer than the longest lumber available. It will be broken into smaller pieces. Please review the lengths BOMd and notify the developers if incorrect.
OOB Internal	The length required for the Roof Trans Top Girt is longer than the longest lumber available. It will be broken into smaller pieces. Please review the lengths BOMd and notify the developers if incorrect.
OOB Internal	The quantity of part number 034125 has been adjusted to meet an order increment of 1. A quantity of 0.0402 has been added to each row in the bill of material.
OOB Internal	The quantity of part number 085122-108 has been adjusted to meet an order increment of 5. A quantity of 1.5 has been added to each row in the bill of material.
OOB User	Any Opening: One or more openings that are Furnished By Others (FBO) have been added. Dealer must ensure that the opening size, framing, and flashing meet the requirements of the door or window being provided.
OOB User	Ceiling Finish and/or Sheathing Material is FBO - Design Ceiling Dead Load is 15 psf. Ceiling Unit Weight is assumed to be 1 psf. Please Verify.
OOB User	Design Ground Snow Load is governed by Low Slope Minimum Roof Snow Load [Importance Factor 1 x 20 psf = 20 psf]. Ground Snow Load was changed to 23.8 psf.
OOB User	DESIGN OPTION: Building Enclosure (Enclosed) is not changed by ignoring Clear Openings.
OOB User	DESIGN OPTION: Building Enclosure changes from Partially Enclosed to Enclosed when Clear Openings are ignored.
OOB User	Design Roof Snow Load is governed by Low Slope Minimum Roof Snow Load [Importance Factor 1 x 20 psf = 20 psf]. Roof Snow Load was changed to 20 psf.
OOB User	Lean To Truss heel height requirements have decreased the roof stepdown below the acceptable level. - Truss heel height requirement for Lean To L1 reduces stepdown height BELOW minimum allowed.
OOB User	Lean To Truss heel height requirements have decreased the roof stepdown below the acceptable level. - Truss heel height requirement for Lean To L2 reduces stepdown height BELOW minimum allowed.
OOB User	Min. Code Wind Speed must be verified with Local Authorities. Refer to ASCE Hazard Tool Website for ASCE 7-16 Risk Cat. II.
OOB User	NON-STANDARD DESIGN OPTION IS IN USE: Building Enclosure classification for Wind Load is

Messages	
	overridden to ENCLOSED.
OOB User	NON-STANDARD DESIGN OPTION IS IN USE: Clear Openings on Walls S1 S2 are ignored for Building Enclosure calculation.
OOB User	NON-STANDARD DESIGN OPTION IS IN USE: User is NOT forced to return to Inputs on Selected Conflict Resolution items.
OOB User	Openings 1-22: Openings of the same model exist with different feature choices. Switch to "Feature" mode to review the differences.
OOB User	Openings 3-9: Horizontal location is violating the Alignment or MeasureTo property. Reset the opening location or change to Location Critical.
OOB User	Surface Finish and/or Sheathing is Furnished By Others (FBO) on one or more Surfaces. FBO Materials and Fastening of FBO Materials to Framing must be designed and detailed to resist applied Surface Loads.
OOB User	You have selected a ceiling with finish furnished by others. Ensure the Truss Bottom Chord Load (Roof Loads tab of Design dialog) and the Bottom Chord Brace Preferences (Roof Framing tab of Bldg Options) are set according to the finish that will be used.

LESTER BUILDINGS	FRAME ANALYSIS	Job: 637515
		Page: 1 of 3
	Dealer: Prehn Building Systems Inc.	By: kfl
	Owner: Service Master	Date: 10/6/2026

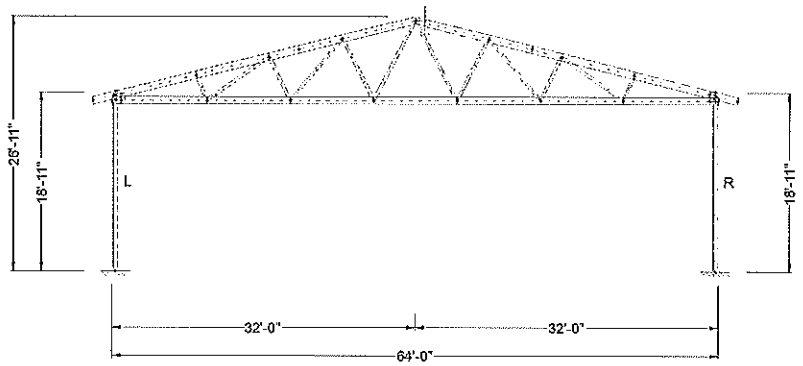

Column Input Information

Column .	Located From	Base Elevation	Flexural Axis	Base Fixity	Splice Type/Ht
L	0'-4 1/4" From Left SW	0'-0"	Strong	Fixed	None
R	0'-4 1/4" From Right SW	0'-0"	Strong	Fixed	None

Column .	Axial Bracing	Flexural Bracing	Bearing Eccentricity	Moisture Condition	Axial Allowable
L	36" Spacing	Continuous	0'-0"	Wet Full Ht.	One-Ply
R	36" Spacing	Continuous	0'-0"	Wet Full Ht.	One-Ply

LESTER BUILDINGS	FRAME ANALYSIS	Job: 637515
		Page: 2 of 3
	Dealer: Prehn Building Systems Inc.	By: kfl
	Owner: Service Master	Date: 10/6/2026

TRUSS FRAME ANALYSIS SUMMARY

—

SUMMARY OF ANALYSIS RESULTS FOR COLUMNS

Max. Base CSI: 0.449 .6D+W(L-) L: 0'-0"
Max. Upper CSI: 0.827 D+S L: 0'-8 1/8"

Max. Horizontal Shear Base Reaction (lb): -967.8 .6D+W(L-) Col: L
Max. Vertical Compression Base Reaction (lb): 16133.9 D+S Col: L
Max. Vertical Tension Base Reaction (lb): -614.3 .6D+W(E+) Col: L

Max. Base Moment (ft-lb): -3692.7 .6D+W(L-) L: 0'-0"
Max. Upper Moment (ft-lb): -2712.8 .6D+W(L-) L: 0'-1 3/4"

Max. Column Deflection (in): 0.414 .6D+W(E+) R
Max. Column Deflection Index : 0.217 Max. Column Deflection Ratio : L / 552

Max. Frame Drift Deflection (in): 0.22 .6D+W(Lm) Drift
Max. Frame Drift Deflection Index : 0.039 Max. Frame Drift Deflection Ratio : L / 1037

Max. Horizontal Shear Load At Top (lb): 563 .6D+W(L-) L: 19'-0 1/8"
Max. Vertical Compression Load At Top (lb): 15126 D+S L: 19'-0 1/8"
Max. Vertical Tension Load At Top (lb): -1275.6 .6D+W(E+) L: 19'-0 1/8"

BUILDING GEOMETRY

Frame ID:	F1		Frame Description:	Typ. Interior Frame
Building Width:	64'-0"		Building Length:	80'-1 1/2"
Embedment Depth:	4'-0"		Bay Spacing:	8'-0"
	Left	Right		
Eave Height:	18'-11"	18'-11"	Peak Height:	26'-11"
Roof Slope:	3/12	3/12	Peak Location:	32'-0"
Overhang:	2'-0"	2'-0"	Mean Roof Height:	22'-8"
Bldg Enclosure:	Enclosed		Frame Type:	Uni-1 - All Columns Fixed

FRAME MATERIALS

Member	Matl ID	Description
Column L	5390	F6666 DFL/SYP M-23/2400 MSR 1.8E (Len. = 23'-6 1/8" Cr = 1)
Column R	5390	F6666 DFL/SYP M-23/2400 MSR 1.8E (Len. = 23'-6 1/8" Cr = 1)
T1: Top Chord	1785	2-Ply 2x10 DFL/SYP M-23/2400 MSR 1.8E
T1: Bot. Chord	1785	2-Ply 2x10 DFL/SYP M-23/2400 MSR 1.8E
T1: Webs	2000	2-Ply 2x4 Lester No.1

TRUSS

Truss ID:	Configuration:	Span:	Description:
T1	T87-TFINK	64'-0"	

DIAPHRAGM

Building Diaphragm is used for Lateral Load Resistance.
Diaphragm Type: Diaphragm Deflection Specified. Diaphragm Deflection = 0.331 in
Frame Deflection Under Full Wind Load (No Diaphragm): 0 in

LESTER BUILDINGS	FRAME ANALYSIS	Job: 637515
		Page: 3 of 3
	Dealer: Prehn Building Systems Inc.	By: kfl
	Owner: Service Master	Date: 10/6/2026

TRUSS FRAME ANALYSIS SUMMARY (Continued)

BUILDING GRAVITY LOADS

Roof Dead Load: 4 psf
Roof Live Load: 13.12 psf
Roof Snow Load (Uniform): 42 psf
Ground Snow Load: 50 psf
Roof Snow Load (Unbalanced - Wind From Left):
Windward Roof Snow Load: 12.6 psf
Leeward Roof Snow Load: 42 psf
Leeward Roof Snow Surcharge Load: 23.6 psf
Length of Leeward Roof Surcharge: 12'-3 1/4"
Roof Snow Load (Unbalanced - Wind From Right):
Windward Roof Snow Load: 12.6 psf
Leeward Roof Snow Load: 42 psf
Leeward Roof Snow Surcharge Load: 23.6 psf
Length of Leeward Roof Surcharge: 12'-3 1/4"
Ceiling Dead Load: 10 psf
Wall Dead Load: 5.5 psf

BUILDING WIND LOADS

Building Code: IBC-2021 Exposure Category: C
Basic Wind Speed: 115 MPH Occupancy Category: General Use
Building Enclosure: Enclosed

Direction (Internal) (psf)	Left(Neg)	Left(Pos)	Left(Min)	Right(Neg)	Right(Pos)	Right(Min)
Windward Side Wall:	10.6	4.82	4.8	--	--	--
Windward OH:	-22.32	-22.32	0	--	--	--
Windward Roof:	-8.19	-13.97	2.4	--	--	--
Leeward Roof:	-4.18	-9.96	-2.4	--	--	--
Leeward OH:	-7.07	-7.07	0	--	--	--
Leeward Side Wall:	-3.05	-8.83	-4.8	--	--	--

Direction (Internal) (psf)	Longit.(Pos)
Left Side Wall:	-10.12
Left Roof & OH:	-13.97
Right Roof & OH:	-8.83
Right Side Wall:	-10.12

LOAD COMBINATIONS

Combination	Duration Factor (Cd)	Combination	Duration Factor (Cd)
D	0.9	D+Lr	1.25
D+S	1.15	D+S(UL)	1.15
D+.75(W(L-)+Lr)	1.6	D+.75(W(L+)+Lr)	1.6
D+.75(W(Lm)+Lr)	1.6	D+.75(W(E+)+Lr)	1.6
D+.75(W(L-)+S)	1.6	D+.75(W(L+)+S)	1.6
D+.75(W(Lm)+S)	1.6	D+.75(W(E+)+S)	1.6
D+.75(W(L-)+S(UL))	1.6	D+.75(W(L+)+S(UL))	1.6
D+.75(W(Lm)+S(UL))	1.6	.6D+W(L-)	1.6
.6D+W(L+)	1.6	.6D+W(Lm)	1.6
.6D+W(E+)	1.6		

Job	Truss	Truss Type	Qty	Ply	PREHN BUILDING SYSTEMS/SERVICE MASTER
637515	T1-C001-Cond1	TRIPLE FINK	10	2	Job Reference (optional)

Lester Building Systems, LLC, Lester Prairie, MN, 55354 TTP x5237

25.1.0 s Apr 28 2025 MiTek Industries, Inc. Mon Aug 31 08:45:55 2026 Page 1
ID:T7wn7nUnOV79GsJYWqz4nVyCelo-NA8ZYM0qwwNd_1VjtMlcnZafjl_vcpSiHesr1WyiNjg

-1-10-8	10-1-13	17-5-3	24-8-10	32-0-0	39-3-6	46-6-13	53-10-3	64-0-0	65-10-8
1-10-8	10-1-13	7-3-6	7-3-6	7-3-6	7-3-6	7-3-6	7-3-6	10-1-13	1-10-8

Scale = 1:125.9

5 1/4" FACE CUT
3/4" OH NOTCH

3.00 12

10x14 M18AHS ||

TC MARKS F/RIDGE:
6 3/8 - 15 1/2 - 7 @ 19 - 2 @ 24 - 8 - 16 3/8 - 7 @ 24 - 23 7/8 (IN)
BC MARKS F/HEEL: 16 @ 48 (IN)

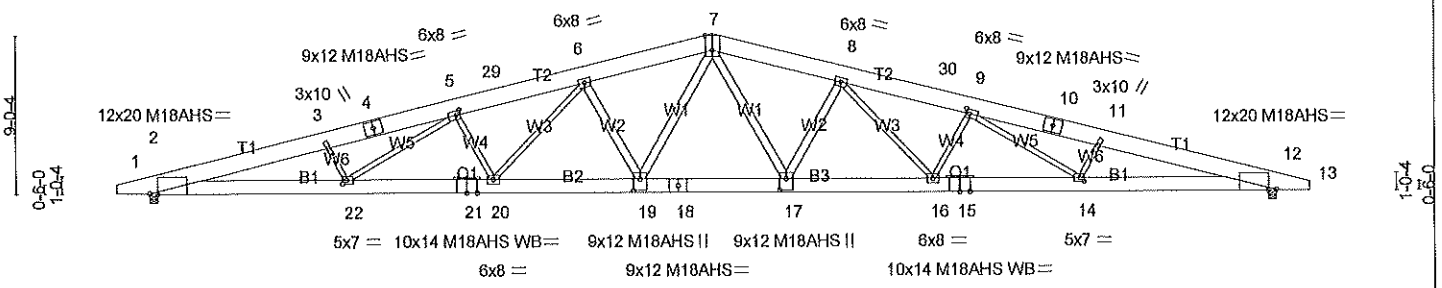

11-2-4	19-6-3	27-10-1	36-1-15	44-5-13	52-9-12	64-0-0
11-2-4	8-3-14	8-3-14	8-3-14	8-3-14	8-3-14	11-2-4

Plate Offsets (X,Y)-- [2:0-5-7,Edge], [5:0-2-8,0-3-0], [7:0-10-0,0-5-0], [9:0-2-8,0-3-0], [12:0-5-7,Edge], [14:0-2-12,0-2-8], [17:0-7-12,0-4-8], [19:0-7-12,0-4-8], [22:0-2-12,0-2-8]

LOADING (psf)		SPACING-	8-0-0	CSI.		DEFL.	in	(loc)	l/defl	L/d	PLATES	GRIP
TCLL (roof)	42.0	Plate Grip DOL	1.15	TC	0.69	Vert(LL)	-1.62	17-19	>475	360	MT20	220/190
Snow (Ps/Pg)	42.0/50.0	Lumber DOL	1.15	BC	0.98	Vert(CT)	-2.16	17-19	>356	180	M18AHS	169/162
TCDL	4.0	Rep Stress Incr	NO	WB	0.84	Horz(CT)	0.55	12	n/a	n/a		
BCLL	0.0	Code	IBC2021/TPI2014	Matrix-MR							Weight: 1439 lb	FT = 10%
BCDL	10.0											

LUMBER- [MCT]

TOP CHORD	2x12 M23/2400MSR 1.8E DF/SP
BOT CHORD	2x10 M23/2400MSR 1.8E DF/SP
WEBS	2x4 #2 Lester *Except*
	W2: 2x6 M23/2400MSR 1.8E DF/SP, W1: 2x6 #1 Lester
OTHERS	2x2 DF No.2 or 2x2 SP No.2

BRACING-

TOP CHORD	2-0-0 oc purlins (3-5-6 max.).
BOT CHORD	4-0-0 oc bracing.

REACTIONS. (lb/size) 2=14683/0-5-8 (req. 0-7-13), 12=14683/0-5-8 (req. 0-7-13)
Max Horz 2=-309(LC 13)
Max Uplift2=-2265(LC 8), 12=-2265(LC 9)

FORCES. (lb) - Max. Comp./Max. Ten. - All forces 250 (lb) or less except when shown.

TOP CHORD	2-3=-44688/6582, 3-4=-43736/6493, 4-5=-43553/6516, 5-29=-39833/5854, 6-29=-39500/5878, 6-7=-32795/4780, 7-8=-32795/4781, 8-30=-39500/5879, 9-30=-39834/5855, 9-10=-43553/6522, 10-11=-43736/6500, 11-12=-44688/6588
BOT CHORD	2-22=-6424/42998, 21-22=-5771/40157, 20-21=-5771/40157, 19-20=-4693/34307, 18-19=-3580/28369, 17-18=-3580/28369, 16-17=-4432/34307, 15-16=-5511/40157, 14-15=-5511/40157, 12-14=-6169/42998
WEBS	3-22=-1576/515, 5-22=-562/2786, 5-20=-4648/950, 6-20=-1077/6625, 6-19=-8013/1280, 7-19=-1220/8840, 7-17=-1220/8840, 8-17=-8013/1281, 8-16=-1078/6625, 9-16=-4648/951, 9-14=-567/2786, 11-14=-1576/518

NOTES-

1) 2-ply truss to be connected together with 10d (0.131"x3") nails as follows:
   Top chords connected as follows: 2x12 - 2 rows staggered at 0-9-0 oc.
   Bottom chords connected as follows: 2x10 - 2 rows staggered at 0-9-0 oc.
   Webs connected as follows: 2x4 - 1 row at 0-9-0 oc, 2x6 - 2 rows staggered at 0-9-0 oc.
2) All loads are considered equally applied to all plies, except if noted as front (F) or back (B) face in the LOAD CASE(S) section. Ply to ply connections have been provided to distribute only loads noted as (F) or (B), unless otherwise indicated.
3) This truss has been checked for uniform roof live load only, except as noted.
4) Wind: ASCE 7-16; Vult=115mph (3-second gust) Vasd=91mph; TCDL=2.4psf; BCDL=1.0psf; h=14ft; Cat. II; Exp C; Enclosed; MWFRS (envelope); cantilever left and right exposed ; end vertical left and right exposed; Lumber DOL=1.33 plate grip DOL=1.33
5) TCLL: ASCE 7-16; Pr=42.0 psf (roof LL: Lum DOL=1.15 Plate DOL=1.15); Pg=50.0 psf; Ps=42.0 psf (Lum DOL=1.15 Plate DOL=1.15); Is=1.0; Rough Cat C; Partially Exp.; Ce=1.0; Cs=1.00; Ct=1.20; Unobstructed slippery surface
6) Roof design snow load has been reduced to account for slope.
7) Unbalanced snow loads have been considered for this design.
8) This truss has been designed for greater of min roof live load of 12.0 psf or 1.00 times flat roof load of 42.0 psf on overhangs non-concurrent with other live loads.
9) WARNING: This long span truss requires extreme care and experience for proper and safe handling and erection. For general handling and erection guidance, see Guide to Good Practice for Handling, Installing & Bracing of Metal Plate Connected Wood Trusses ("BCSI"), jointly produced by SBCA and TPI. The building owner or the owner's authorized agent shall contract with a qualified registered design professional for the design and inspection of the temporary installation restraint/bracing and the permanent individual truss member restraint/bracing. MiTek assumes no responsibility for truss manufacture, handling, erection, or bracing.

Continued on page 2

Job	Truss	Truss Type	Qty	Ply	PREHN BUILDING SYSTEMS/SERVICE MASTER
637515	T1-C001-Cond1	TRIPLE FINK	10	2	Job Reference (optional)

NOTES-

10) Dead loads shown include weight of truss. Top chord dead load of 5.0 psf (or less) is not adequate for a shingle roof. Architect to verify adequacy of top chord dead load.
11) All plates are MT20 plates unless otherwise indicated.
12) This truss has been designed for a 10.0 psf bottom chord live load nonconcurrent with any other live loads.
13) WARNING: Required bearing size at joint(s) 2, 12 greater than input bearing size.
14) Provide mechanical connection (by others) of truss to bearing plate capable of withstanding 100 lb uplift at joint(s) except (jt=lb) 2=2265, 12=2265.
15) Purlins are supported between trusses by means of a ledger strip or purlin hanger.

LOAD CASE(S) Standard

Job	Truss	Truss Type	Qty	Ply	PREHN BUILDING SYSTEMS/SERVICE MASTER
637515	T1-C001-Cond2	TRIPLE FINK	10	2	Job Reference (optional)

Lester Building Systems, LLC, Lester Prairie, MN, 55354 TTP x5237 — 25.1.0 s Apr 28 2025 MiTek Industries, Inc. Mon Aug 31 08:45:56 2026 Page 1
ID:T7wn7nUnOV79GsJYWqz4nVyCelo-rMixml1ShEVUcB4wR4prKm6yc9YGLTGsVlcOZyyiNjf

-1-10-8	10-1-13	17-5-3	24-8-10	32-0-0	39-3-6	46-6-13	53-10-3	64-0-0	65-10-8
1-10-8	10-1-13	7-3-6	7-3-6	7-3-6	7-3-6	7-3-6	7-3-6	10-1-13	1-10-8

Scale = 1:125.9

5 1/4" FACE CUT
3/4" OH NOTCH
3.00 | 12
10x14 M18AHS II

TC MARKS F/RIDGE:
6 3/8 - 15 1/2 - 7 @ 19 - 2 @ 24 - 8 - 16 3/8 - 7 @ 24 - 23 7/8 (IN)
BC MARKS F/HEEL: 16 @ 48 (IN)

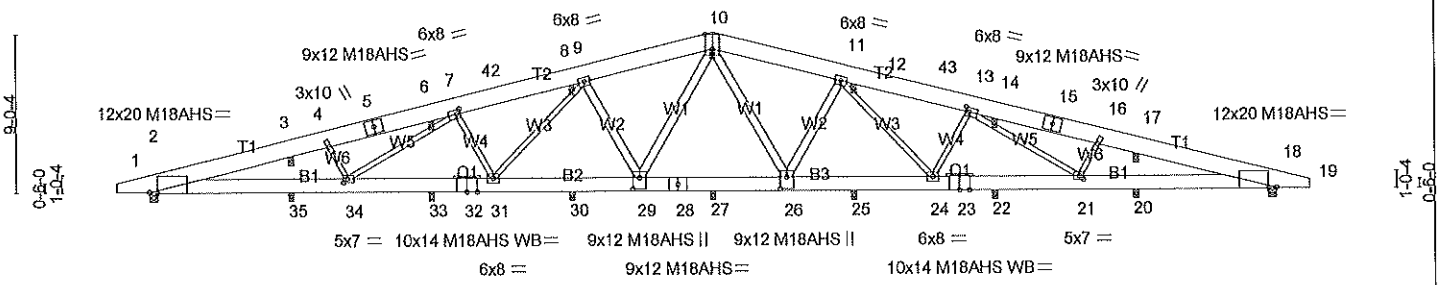

11-2-4	19-6-3	27-10-1	36-1-15	44-5-13	52-9-12	64-0-0
11-2-4	8-3-14	8-3-14	8-3-14	8-3-14	8-3-14	11-2-4

Plate Offsets (X,Y)-- [2:0-5-7,Edge], [7:0-2-8,0-3-0], [10:0-10-0,0-5-0], [13:0-2-8,0-3-0], [18:0-5-7,Edge], [21:0-2-12,0-2-8], [26:0-7-12,0-4-8], [29:0-7-12,0-4-8], [34:0-2-12,0-2-8]

LOADING (psf)		SPACING-	8-0-0	CSI.		DEFL.	in	(loc)	l/defl	L/d	PLATES	GRIP
TCLL (roof)	42.0	Plate Grip DOL	1.15	TC	0.17	Vert(LL)	-0.01	41	>999	360	MT20	220/190
Snow (Ps/Pg)	42.0/50.0	Lumber DOL	1.15	BC	0.08	Vert(CT)	-0.02	41	>999	180	M18AHS	169/162
TCDL	4.0	Rep Stress Incr	NO	WB	0.04	Horz(CT)	0.00	18	n/a	n/a		
BCLL	0.0	Code	IBC2021/TPI2014	Matrix-MR							Weight: 1439 lb	FT = 10%
BCDL	10.0											

LUMBER- [MCT]
TOP CHORD 2x12 M23/2400MSR 1.8E DF/SP
BOT CHORD 2x10 M23/2400MSR 1.8E DF/SP
WEBS 2x4 #2 Lester *Except*
W2: 2x6 M23/2400MSR 1.8E DF/SP, W1: 2x6 #1 Lester
OTHERS 2x2 DF No.2 or 2x2 SP No.2

BRACING-
TOP CHORD 2-0-0 oc purlins (6-0-0 max.).
BOT CHORD 4-0-0 oc bracing.

REACTIONS. All bearings 0-3-8 except (jt=length) 2=0-5-8, 18=0-5-8.
(lb) - Max Horz 2=-309(LC 13)
Max Uplift All uplift 100 lb or less at joint(s) 35, 33, 22, 20 except 2=-330(LC 8), 10=-408(LC 8), 18=-364(LC 9), 3=-613(LC 12), 6=-586(LC 8), 8=-653(LC 12), 12=-646(LC 13), 14=-586(LC 9), 17=-614(LC 13)
Max Grav All reactions 250 lb or less at joint(s) except 2=1839(LC 17), 10=3422(LC 1), 18=1839(LC 18), 35=1011(LC 17), 3=3012(LC 17), 33=866(LC 7), 6=2846(LC 17), 30=833(LC 7), 8=4473(LC 17), 27=798(LC 7), 25=833(LC 7), 12=4473(LC 18), 22=866(LC 7), 14=2846(LC 18), 20=1011(LC 18), 17=3012(LC 18)

FORCES. (lb) - Max. Comp./Max. Ten. - All forces 250 (lb) or less except when shown.
TOP CHORD 2-3=-264/286, 3-4=-549/263, 4-5=-300/260, 5-6=-106/305, 6-7=-501/361, 7-42=-382/368, 8-42=-106/392, 8-9=-733/487, 9-10=-483/550, 10-11=-483/546, 11-12=-733/501, 12-43=-106/352, 13-43=-382/320, 13-14=-501/337, 15-16=-300/173, 16-17=-549/186
BOT CHORD 2-35=-92/275, 34-35=-92/275, 33-34=-22/257, 32-33=-22/257, 31-32=-22/257, 30-31=-200/295, 29-30=-200/295, 28-29=-199/308, 27-28=-199/308, 26-27=-199/308, 25-26=-200/252, 24-25=-200/252
WEBS 4-34=-157/345, 7-31=-123/255, 9-31=-37/305, 9-29=-237/261, 10-29=-40/381, 10-26=-36/381, 11-26=-237/261, 11-24=-28/305, 13-24=-123/255, 16-21=-157/345

NOTES-
1) 2-ply truss to be connected together with 10d (0.131"x3") nails as follows:
Top chords connected as follows: 2x12 - 2 rows staggered at 0-9-0 oc.
Bottom chords connected as follows: 2x10 - 2 rows staggered at 0-9-0 oc.
Webs connected as follows: 2x4 - 1 row at 0-9-0 oc, 2x6 - 2 rows staggered at 0-9-0 oc.
2) All loads are considered equally applied to all plies, except if noted as front (F) or back (B) face in the LOAD CASE(S) section. Ply to ply connections have been provided to distribute only loads noted as (F) or (B), unless otherwise indicated.
3) This truss has been checked for uniform roof live load only, except as noted.
4) Wind: ASCE 7-16; Vult=115mph (3-second gust) Vasd=91mph; TCDL=2.4psf; BCDL=1.0psf; h=14ft; Cat. II; Exp C; Enclosed; MWFRS (envelope); cantilever left and right exposed ; end vertical left and right exposed; Lumber DOL=1.33 plate grip DOL=1.33
5) TCLL: ASCE 7-16; Pr=42.0 psf (roof LL: Lum DOL=1.15 Plate DOL=1.15); Pg=50.0 psf; Ps=42.0 psf (Lum DOL=1.15 Plate DOL=1.15); Is=1.0; Rough Cat C; Partially Exp.; Ce=1.0; Cs=1.00; Ct=1.20; Unobstructed slippery surface
6) Roof design snow load has been reduced to account for slope.
7) Unbalanced snow loads have been considered for this design.
8) This truss has been designed for greater of min roof live load of 12.0 psf or 1.00 times flat roof load of 42.0 psf on overhangs non-concurrent with other live loads.

Continued on page 2

Job	Truss	Truss Type	Qty	Ply	PREHN BUILDING SYSTEMS/SERVICE MASTER
637515	T1-C001-Cond2	TRIPLE FINK	10	2	Job Reference (optional)

NOTES-

9) WARNING: This long span truss requires extreme care and experience for proper and safe handling and erection. For general handling and erection guidance, see Guide to Good Practice for Handling, Installing & Bracing of Metal Plate Connected Wood Trusses ("BCSI"), jointly produced by SBCA and TPI. The building owner or the owner's authorized agent shall contract with a qualified registered design professional for the design and inspection of the temporary installation restraint/bracing and the permanent individual truss member restraint/bracing. MiTek assumes no responsibility for truss manufacture, handling, erection, or bracing.
10) Dead loads shown include weight of truss. Top chord dead load of 5.0 psf (or less) is not adequate for a shingle roof. Architect to verify adequacy of top chord dead load.
11) All plates are MT20 plates unless otherwise indicated.
12) This truss has been designed for a 10.0 psf bottom chord live load nonconcurrent with any other live loads.
13) Provide mechanical connection (by others) of truss to bearing plate capable of withstanding 100 lb uplift at joint(s) 35, 33, 22, 20 except (jt=lb) 2=330, 10=408, 18=364, 3=613, 6=586, 8=653, 12=646, 14=586, 17=614.
14) Beveled plate or shim required to provide full bearing surface with truss chord at joint(s) 10, 3, 6, 8, 12, 14, 17.
15) Gap between inside of top chord bearing and first diagonal or vertical web shall not exceed 0.500in.
16) Purlins are supported between trusses by means of a ledger strip or purlin hanger.

LOAD CASE(S) Standard

Job	Truss	Truss Type	Qty	Ply	PREHN BUILDING SYSTEMS/SERVICE MASTER
637515	T2-C002	TRIPLE FINK	1	1	Job Reference (optional)

Lester Building Systems, LLC, Lester Prairie, MN, 55354 TTP x5237

25.1.0 s Apr 28 2025 MiTek Industries, Inc. Mon Aug 31 08:46:54 2026 Page 1
ID:T7wn7nUnOV79GsJYWqz4nVyCeIo-8WCsxXkq13pFZ5W3rFrSg?WmxX8jxTAOrJfTbbyiNi

-1-10-8	10-1-13	17-5-3	24-8-10	32-0-0	39-3-6	46-6-13	53-10-3	64-0-0	65-10-8
1-10-8	10-1-13	7-3-6	7-3-6	7-3-6	7-3-6	7-3-6	7-3-6	10-1-13	1-10-8

Scale = 1:126.2

TC MARKS F/RIDGE:
6 3/8 - 15 1/2 - 7 @ 19 - 2 @ 24 - 8 - 16 3/8 - 7 @ 24 - 23 7/8 (IN)
BC MARKS F/HEEL: 16 @ 48 (IN)

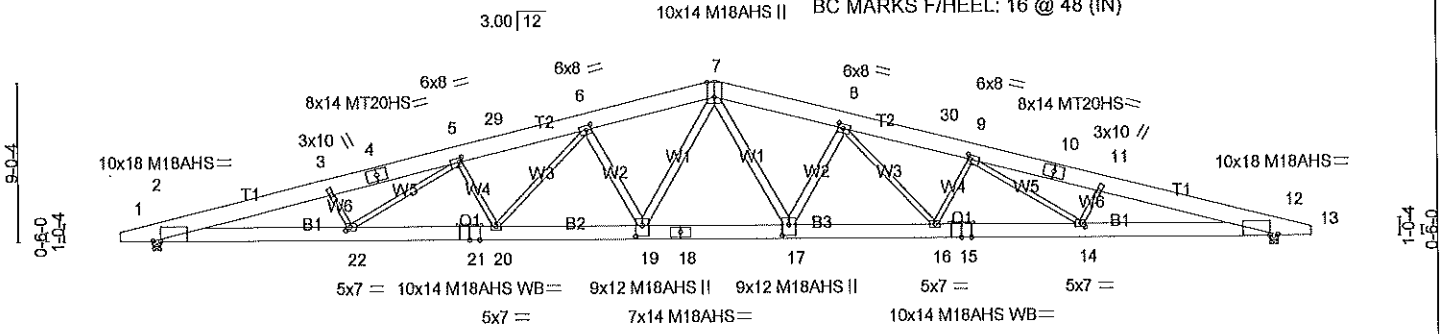

11-2-4	19-6-3	27-10-1	36-1-15	44-5-13	52-9-12	64-0-0
11-2-4	8-3-14	8-3-14	8-3-14	8-3-14	8-3-14	11-2-4

Plate Offsets (X,Y)-- [2:0-5-7,0-0-6], [5:0-2-4,0-3-0], [6:0-3-4,0-3-0], [7:0-10-0,0-5-0], [8:0-3-4,0-3-0], [9:0-2-4,0-3-0], [12:0-5-7,0-0-6], [14:0-3-0,0-2-8], [17:0-7-4,0-4-8], [19:0-7-4,0-4-8], [22:0-3-0,0-2-8]

LOADING (psf)		SPACING-	3-6-0	CSI.		DEFL.	in	(loc)	l/defl	L/d	PLATES	GRIP
TCLL (roof)	42.0	Plate Grip DOL	1.15	TC	0.62	Vert(LL)	-1.39	17-19	>553	360	MT20	220/190
Snow (Ps/Pg)	42.0/50.0	Lumber DOL	1.15	BC	0.85	Vert(CT)	-1.86	17-19	>414	180	MT20HS	165/143
TCDL	4.0	Rep Stress Incr	NO	WB	0.97	Horz(CT)	0.47	12	n/a	n/a	M18AHS	169/162
BCLL	0.0	Code	IBC2021/TPI2014	Matrix-MR							Weight: 720 lb	FT = 10%
BCDL	10.0											

LUMBER-
TOP CHORD 2x12 M23/2400MSR 1.8E DF/SP
BOT CHORD 2x10 M23/2400MSR 1.8E DF/SP
WEBS 2x4 #2 Lester *Except*
W2: 2x6 M23/2400MSR 1.8E DF/SP, W1: 2x6 #1 Lester
OTHERS 2x2 DF No.2 or 2x2 SP No.2

BRACING-
TOP CHORD 2-0-0 oc purlins (2-8-9 max.).
BOT CHORD 4-0-0 oc bracing.

REACTIONS. (lb/size) 2=6424/0-5-8 (req. 0-6-14), 12=6424/0-5-8 (req. 0-6-14)
Max Horz 2=-135(LC 13)
Max Uplift2=-991(LC 8), 12=-991(LC 9)

FORCES. (lb) - Max. Comp./Max. Ten. - All forces 250 (lb) or less except when shown.
TOP CHORD 2-3=-19615/2889, 3-4=-19191/2849, 4-5=-19111/2859, 5-29=-17421/2560, 6-29=-17276/2571, 6-7=-14349/2092, 7-8=-14349/2092, 8-30=-17276/2571, 9-30=-17421/2561, 9-10=-19111/2861, 10-11=-19191/2852, 11-12=-19615/2891
BOT CHORD 2-22=-2820/18877, 21-22=-2524/17564, 20-21=-2524/17564, 19-20=-2053/15010, 18-19=-1566/12411, 17-18=-1566/12411, 16-17=-1939/15010, 15-16=-2410/17564, 14-15=-2410/17564, 12-14=-2708/18877
WEBS 3-22=-723/230, 5-22=-255/1283, 5-20=-2035/416, 6-20=-470/2890, 6-19=-3506/560, 7-19=-534/3869, 7-17=-534/3869, 8-17=-3506/560, 8-16=-470/2890, 9-16=-2035/416, 9-14=-257/1283, 11-14=-723/231

NOTES-
1) This truss has been checked for uniform roof live load only, except as noted.
2) Wind: ASCE 7-16; Vult=115mph (3-second gust) Vasd=91mph; TCDL=2.4psf; BCDL=1.0psf; h=14ft; Cat. II; Exp C; Enclosed; MWFRS (envelope); cantilever left and right exposed ; end vertical left and right exposed; Lumber DOL=1.33 plate grip DOL=1.33
3) TCLL: ASCE 7-16; Pr=42.0 psf (roof LL: Lum DOL=1.15 Plate DOL=1.15); Pg=50.0 psf; Ps=42.0 psf (Lum DOL=1.15 Plate DOL=1.15); Is=1.0; Rough Cat C; Partially Exp.; Ce=1.0; Cs=1.00; Ct=1.20; Unobstructed slippery surface
4) Roof design snow load has been reduced to account for slope.
5) Unbalanced snow loads have been considered for this design.
6) This truss has been designed for greater of min roof live load of 12.0 psf or 1.00 times flat roof load of 42.0 psf on overhangs non-concurrent with other live loads.
7) WARNING: This long span truss requires extreme care and experience for proper and safe handling and erection. For general handling and erection guidance, see Guide to Good Practice for Handling, Installing & Bracing of Metal Plate Connected Wood Trusses ("BCSI"), jointly produced by SBCA and TPI. The building owner or the owner's authorized agent shall contract with a qualified registered design professional for the design and inspection of the temporary installation restraint/bracing and the permanent individual truss member restraint/bracing. MiTek assumes no responsibility for truss manufacture, handling, erection, or bracing.
8) Dead loads shown include weight of truss. Top chord dead load of 5.0 psf (or less) is not adequate for a shingle roof. Architect to verify adequacy of top chord dead load.
9) All plates are MT20 plates unless otherwise indicated.
10) This truss has been designed for a 10.0 psf bottom chord live load nonconcurrent with any other live loads.
11) WARNING: Required bearing size at joint(s) 2, 12 greater than input bearing size.

Continued on page 2

Job	Truss	Truss Type	Qty	Ply	PREHN BUILDING SYSTEMS/SERVICE MASTER
637515	T2-C002	TRIPLE FINK	1	1	Job Reference (optional)

NOTES-

12) Provide mechanical connection (by others) of truss to bearing plate capable of withstanding 100 lb uplift at joint(s) except (jt=lb) 2=991, 12=991.
13) Graphical purlin representation does not depict the size or the orientation of the purlin along the top and/or bottom chord.
14) Purlins are supported between trusses by means of a ledger strip or purlin hanger.

LOAD CASE(S) Standard

Job	Truss	Truss Type	Qty	Ply	PREHN BUILDING SYSTEMS/SERVICE MASTER
637515	T3-C003	DROP GABLE	1	1	Job Reference (optional)

Lester Building Systems, LLC, Lester Prairie, MN, 55354 TTP x5237 — 25.1.0 s Apr 28 2025 MiTek Industries, Inc. Mon Aug 31 08:54:06 2026 Page 1
ID:nh?BN9?OT1dsiBqaDkqvG4yTZIZ-VdIAbFypHnEyOUX58_blB5PfoglY9tfzBXlKmYyiNc?

	-1-10-8	9-0-0	12-0-0	18-0-0	22-0-0	27-0-0	32-0-0	37-0-0	42-0-0	46-0-0	55-0-0	64-0-0	65-10-8
	1-10-8	9-0-0	3-0-0	6-0-0	4-0-0	5-0-0	5-0-0	5-0-0	5-0-0	4-0-0	9-0-0	9-0-0	1-10-8

Scale = 1:126.2

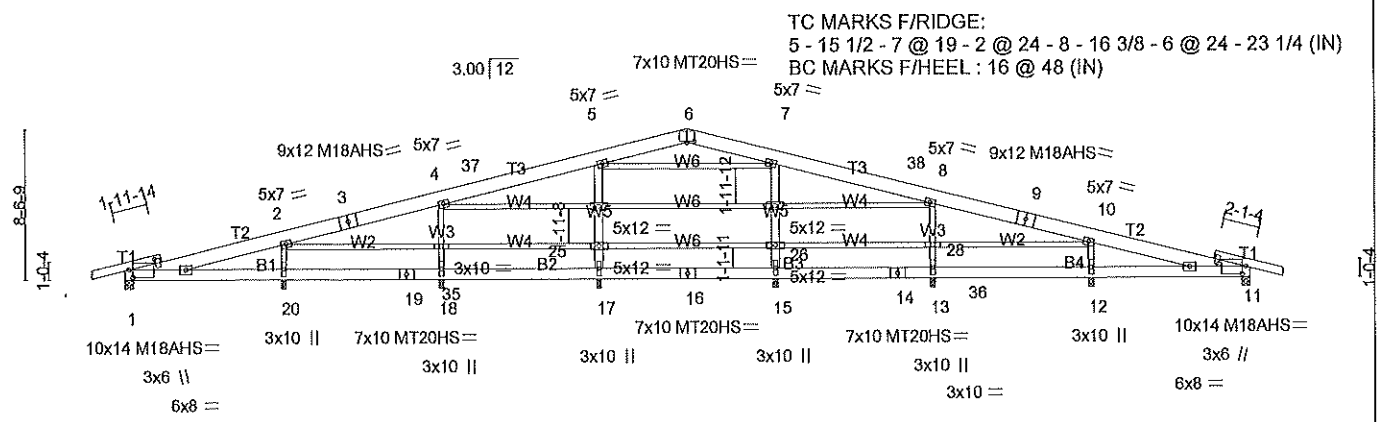

	-1-10-8	9-0-0	12-0-0	18-0-0	22-0-0	27-0-0	32-0-0	37-0-0	42-0-0	46-0-0	55-0-0	64-0-0	65-10-8
	1-10-8	9-0-0	3-0-0	6-0-0	4-0-0	5-0-0	5-0-0	5-0-0	5-0-0	4-0-0	9-0-0	9-0-0	1-10-8

Plate Offsets (X,Y)-- [1:0-2-8,0-5-4], [1:0-3-0,1-6-7], [6:0-5-0,0-0-12], [11:0-2-8,0-5-4], [11:0-3-0,1-6-7]

LOADING (psf)		SPACING-	5-0-0	CSI.		DEFL.	in	(loc)	l/defl	L/d	PLATES	GRIP
TCLL (roof)	42.0	Plate Grip DOL	1.15	TC	0.37	Vert(LL)	-0.06	12-33	>999	360	MT20	220/190
Snow (Ps/Pg)	42.0/50.0	Lumber DOL	1.15	BC	0.23	Vert(CT)	-0.08	12-33	>999	180	MT20HS	165/143
TCDL	4.0	Rep Stress Incr	NO	WB	0.87	Horz(CT)	0.01	11	n/a	n/a	M18AHS	169/162
BCLL	0.0	Code IBC2021/TPI2014		Matrix-MR							Weight: 636 lb	FT = 10%

LUMBER-
TOP CHORD 2x10 M23/2400MSR 1.8E DF/SP *Except*
T1: 2x6 M23/2400MSR 1.8E DF/SP
BOT CHORD 2x8 M23/2400MSR 1.8E DF/SP
WEBS 2x4 #2 Lester *Except*
W5: 2x6 M23/2400MSR 1.8E DF/SP

BRACING-
TOP CHORD 2-0-0 oc purlins (6-0-0 max.).
BOT CHORD 4-0-0 oc bracing.

REACTIONS. All bearings 0-3-8 except (jt=length) 15=0-4-5 (input: 0-3-8), 17=0-4-5 (input: 0-3-8), 1=0-5-8, 11=0-5-8.
(lb) - Max Horz 1=196(LC 12)
Max Uplift All uplift 100 lb or less at joint(s) except 1=-144(LC 8), 11=-160(LC 9), 18=-645(LC 8), 20=-565(LC 8), 13=-579(LC 13), 12=-556(LC 9), 15=-606(LC 9), 17=-622(LC 12)
Max Grav All reactions 250 lb or less at joint(s) except 1=1058(LC 17), 11=1061(LC 18), 18=3134(LC 17), 20=2824(LC 1), 13=2945(LC 18), 12=2802(LC 1), 15=4055(LC 18), 17=4042(LC 17)

FORCES. (lb) - Max. Comp./Max. Ten. - All forces 250 (lb) or less except when shown.
TOP CHORD 1-2=-417/121, 2-3=-655/164, 3-4=-395/184, 4-37=-686/266, 5-37=-365/286, 5-6=-727/365, 6-7=-727/358, 7-38=-368/233, 8-38=-689/214, 8-9=-393/106, 9-10=-654/86, 10-11=-394/43
BOT CHORD 1-20=0/383, 20-35=0/383, 19-35=0/383, 18-19=0/383, 17-18=0/383, 16-17=-0/361, 15-16=-0/361, 14-15=0/374, 14-36=0/374, 13-36=0/374, 12-13=0/382, 11-12=0/382
WEBS 17-25=-3058/487, 5-25=-3058/487, 15-26=-3058/466, 7-26=-3058/466, 4-18=-2374/568, 2-20=-2222/564, 13-28=-2374/572, 8-28=-2374/572, 10-12=-2227/565

NOTES-
1) This truss has been checked for uniform roof live load only, except as noted.
2) Wind: ASCE 7-16; Vult=115mph (3-second gust) Vasd=91mph; TCDL=2.0psf; BCDL=1.0psf; h=20ft; Cat. II; Exp C; Enclosed; MWFRS (envelope); cantilever left and right exposed ; end vertical left and right exposed; Lumber DOL=1.33 plate grip DOL=1.33
3) TCLL: ASCE 7-16; Pr=42.0 psf (roof LL: Lum DOL=1.15 Plate DOL=1.15); Pg=50.0 psf; Ps=42.0 psf (Lum DOL=1.15 Plate DOL=1.15); Is=1.0; Rough Cat C; Partially Exp.; Ce=1.0; Cs=1.00; Ct=1.20; Unobstructed slippery surface
4) Roof design snow load has been reduced to account for slope.
5) Unbalanced snow loads have been considered for this design.
6) WARNING: This long span truss requires extreme care and experience for proper and safe handling and erection. For general handling and erection guidance, see Guide to Good Practice for Handling, Installing & Bracing of Metal Plate Connected Wood Trusses ("BCSI"), jointly produced by SBCA and TPI. The building owner or the owner's authorized agent shall contract with a qualified registered design professional for the design and inspection of the temporary installation restraint/bracing and the permanent individual truss member restraint/bracing. MiTek assumes no responsibility for truss manufacture, handling, erection, or bracing.
7) Dead loads shown include weight of truss. Top chord dead load of 5.0 psf (or less) is not adequate for a shingle roof. Architect to verify adequacy of top chord dead load.
8) All plates are MT20 plates unless otherwise indicated.
9) This truss has been designed for a 10.0 psf bottom chord live load nonconcurrent with any other live loads.
10) WARNING: Required bearing size at joint(s) 15, 17 greater than input bearing size.
11) Provide mechanical connection (by others) of truss to bearing plate capable of withstanding 144 lb uplift at joint 1, 160 lb uplift at joint 11, 645 lb uplift at joint 18, 565 lb uplift at joint 20, 579 lb uplift at joint 13, 556 lb uplift at joint 12, 606 lb uplift at joint 15 and 622 lb uplift at joint 17.

Continued on page 2

Job	Truss	Truss Type	Qty	Ply	PREHN BUILDING SYSTEMS/SERVICE MASTER
637515	T3-C003	DROP GABLE	1	1	Job Reference (optional)

NOTES-
12) Load case(s) 16, 19, 29, 30 has/have been modified. Building designer must review loads to verify that they are correct for the intended use of this truss.
13) Purlins are supported between trusses by means of a ledger strip or purlin hanger.
14) In the LOAD CASE(S) section, loads applied to the face of the truss are noted as front (F) or back (B).

LOAD CASE(S) Standard
1) Dead + Snow (balanced): Lumber Increase=1.15, Plate Increase=1.15
Uniform Loads (plf)
Vert: 1-29=-13, 29-35=-50, 35-36=-100(F=-50), 11-36=-50, 6-29=-230, 6-32=-230
16) Dead + Snow on Overhangs: Lumber Increase=0.90, Plate Increase=0.90 Plt. metal=0.90
Uniform Loads (plf)
Vert: 1-29=-13, 29-35=-50, 35-36=-66(F=-16), 11-36=-50, 6-29=-20, 6-32=-20
19) Dead: Lumber Increase=0.90, Plate Increase=0.90 Plt. metal=0.90
Uniform Loads (plf)
Vert: 1-29=-13, 29-35=-50, 35-36=-66(F=-16), 11-36=-50, 6-29=-20, 6-32=-20
29) Dead + 0.6 MWFRS Wind Min. Left: Lumber Increase=1.33, Plate Increase=1.33
Uniform Loads (plf)
Vert: 1-29=-1, 29-35=-5, 35-36=-10(F=-5), 11-36=-5, 6-29=-15, 6-32=-10
Horz: 6-29=5
30) Dead + 0.6 MWFRS Wind Min. Right: Lumber Increase=1.33, Plate Increase=1.33
Uniform Loads (plf)
Vert: 1-29=-1, 29-35=-5, 35-36=-10(F=-5), 11-36=-5, 6-29=-10, 6-32=-15
Horz: 6-32=-5

Job	Truss	Truss Type	Qty	Ply	PREHN BUILDING SYSTEMS/SERVICE MASTER
637515	T4-C004	TRIPLE FINK	2	1	Job Reference (optional)

Lester Building Systems, LLC, Lester Prairie, MN KFL x5271 — 25.1.0 s Apr 28 2025 MiTek Industries, Inc. Tue Sep 29 14:03:46 2026 Page 1
ID:T7wn7nUnOV79GsJYWqz4nVyCelo-x3TslYfqJYGCblo_dzYzl8J_szbmTDBU7Wr6FyYiLh

-1-11-2	10-3-8	17-6-2	24-8-12	31-11-6	39-2-0	46-4-10	53-7-4	63-10-12	65-9-14
1-11-2	10-3-8	7-2-10	7-2-10	7-2-10	7-2-10	7-2-10	7-2-10	10-3-8	1-11-2

Scale = 1:121.2

TC MARKS F/RIDGE:
6 1/8 - 15 3/4 - 7 @ 19 - 2 @ 24 - 8 - 16 3/8 - 6 @ 24 - 24 1/8 - 23 5/8 (I
BC MARKS F/HEEL: 47 3/8 - 14 @ 48 - 47 3/8 (IN)

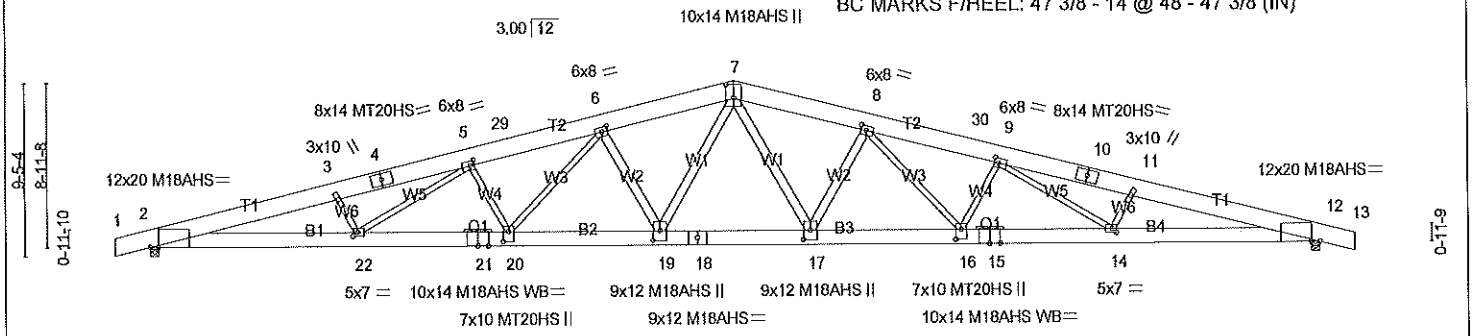

11-3-14	19-6-14	27-9-14	36-0-14	44-3-14	52-6-14	63-10-12
11-3-14	8-3-0	8-3-0	8-3-0	8-3-0	8-3-0	11-3-14

Plate Offsets (X,Y)-- [2:0-5-7,Edge], [5:0-2-8,0-3-0], [6:0-3-8,0-3-0], [7:0-9-0,0-5-0], [8:0-3-8,0-3-0], [9:0-2-8,0-3-0], [12:0-5-7,Edge], [14:0-2-12,0-2-8], [16:0-6-8,0-3-8], [17:0-6-4,0-4-8], [19:0-6-4,0-4-8], [20:0-6-8,0-3-8], [22:0-2-12,0-2-8]

LOADING (psf)		SPACING-	3-6-0	CSI.		DEFL.	in	(loc)	l/defl	L/d	PLATES	GRIP
TCLL (roof)	42.0	Plate Grip DOL	1.15	TC	0.65	Vert(LL)	-1.41	17-19	>542	360	MT20	220/190
Snow (Ps/Pg)	42.0/50.0	Lumber DOL	1.15	BC	0.88	Vert(CT)	-1.89	17-19	>405	180	MT20HS	165/143
TCDL	4.0	Rep Stress Incr	NO	WB	0.96	Horz(CT)	0.48	12	n/a	n/a	M18AHS	169/162
BCLL	0.0	Code	IBC2021/TPI2014	Matrix-MR							Weight: 719 lb	FT = 10%
BCDL	10.0											

LUMBER-
TOP CHORD 2x12 M23/2400MSR 1.8E DF/SP
BOT CHORD 2x10 M23/2400MSR 1.8E DF/SP
WEBS 2x4 #2 Lester *Except*
W2: 2x6 M23/2400MSR 1.8E DF/SP, W1: 2x6 #1 Lester
OTHERS 2x2 DF No.2 or 2x2 SP No.2

BRACING-
TOP CHORD 2-0-0 oc purlins (2-7-15 max.).
BOT CHORD 4-0-0 oc bracing.

REACTIONS. (lb/size) 2=6572/0-5-8 (req. 0-7-0), 12=6572/0-5-8 (req. 0-7-0)
Max Horz 2=-139(LC 13)
Max Uplift2=-1047(LC 8), 12=-1047(LC 9)

FORCES. (lb) - Max. Comp./Max. Ten. - All forces 250 (lb) or less except when shown.
TOP CHORD 2-3=-19868/2906, 3-4=-19430/2865, 4-5=-19357/2875, 5-29=-17483/2560, 6-29=-17340/2571, 6-7=-14384/2091, 7-8=-14384/2092, 8-30=-17340/2572, 9-30=-17483/2561, 9-10=-19361/2879, 10-11=-19434/2869, 11-12=-19872/2910
BOT CHORD 2-22=-2831/19142, 21-22=-2519/17642, 20-21=-2519/17642, 19-20=-2047/15051, 18-19=-1561/12441, 17-18=-1561/12441, 16-17=-1922/15051, 15-16=-2395/17643, 14-15=-2395/17643, 12-14=-2710/19146
WEBS 3-22=-797/240, 5-22=-280/1453, 5-20=-2093/420, 6-20=-474/2944, 6-19=-3545/561, 7-19=-535/3908, 7-17=-535/3908, 8-17=-3545/561, 8-16=-474/2944, 9-16=-2094/421, 9-14=-283/1457, 11-14=-797/241

NOTES-
1) This truss has been checked for uniform roof live load only, except as noted.
2) Wind: ASCE 7-16; Vult=115mph (3-second gust) Vasd=91mph; TCDL=2.4psf; BCDL=1.0psf; h=14ft; Cat. II; Exp C; Enclosed; MWFRS (envelope); cantilever left and right exposed ; end vertical left and right exposed; Lumber DOL=1.33 plate grip DOL=1.33
3) TCLL: ASCE 7-16; Pr=42.0 psf (roof LL: Lum DOL=1.15 Plate DOL=1.15); Pg=50.0 psf; Ps=42.0 psf (Lum DOL=1.15 Plate DOL=1.15); Is=1.0; Rough Cat C; Partially Exp.; Ce=1.0; Cs=1.00; Ct=1.20; Unobstructed slippery surface
4) Roof design snow load has been reduced to account for slope.
5) Unbalanced snow loads have been considered for this design.
6) This truss has been designed for greater of min roof live load of 12.0 psf or 1.00 times flat roof load of 42.0 psf on overhangs non-concurrent with other live loads.
7) WARNING: This long span truss requires extreme care and experience for proper and safe handling and erection. For general handling and erection guidance, see Guide to Good Practice for Handling, Installing & Bracing of Metal Plate Connected Wood Trusses ("BCSI"), jointly produced by SBCA and TPI. The building owner or the owner's authorized agent shall contract with a qualified registered design professional for the design and inspection of the temporary installation restraint/bracing and the permanent individual truss member restraint/bracing. MiTek assumes no responsibility for truss manufacture, handling, erection, or bracing.
8) Dead loads shown include weight of truss. Top chord dead load of 5.0 psf (or less) is not adequate for a shingle roof. Architect to verify adequacy of top chord dead load.
9) All plates are MT20 plates unless otherwise indicated.
10) This truss has been designed for a 10.0 psf bottom chord live load nonconcurrent with any other live loads.
11) WARNING: Required bearing size at joint(s) 2, 12 greater than input bearing size.

Continued on page 2

Job	Truss	Truss Type	Qty	Ply	PREHN BUILDING SYSTEMS/SERVICE MASTER
637515	T4-C004	TRIPLE FINK	2	1	Job Reference (optional)

NOTES-

12) Provide mechanical connection (by others) of truss to bearing plate capable of withstanding 1047 lb uplift at joint 2 and 1047 lb uplift at joint 12.
13) Graphical purlin representation does not depict the size or the orientation of the purlin along the top and/or bottom chord.
14) Purlins are supported between trusses by means of a ledger strip or purlin hanger.

LOAD CASE(S) Standard

Job	Truss	Truss Type	Qty	Ply	PREHN BUILDING SYSTEMS/SERVICE MASTER
637515	V1-C101	KINGPOST	1	1	V1 - 3/12 Valley Truss to 4/12 Roof Job Reference (optional)

Lester Building Systems, LLC, Lester Prairie, MN, 55354 TTP x5237 — 25.1.0 s Apr 28 2025 MiTek Industries, Inc. Fri Aug 28 10:44:59 2026 Page 1
ID:JD?qg6XlNSDfN4ponQGE77ynZec-Ukx?WgeyTj_RaQNa85EY72ACISs4T_ZG5iK9J3yjLG2

-1-7-13 | 1-8-0 | 3-4-0 | 4-11-13
1-7-13 | 1-8-0 | 1-8-0 | 1-7-13

Scale = 1:12.9

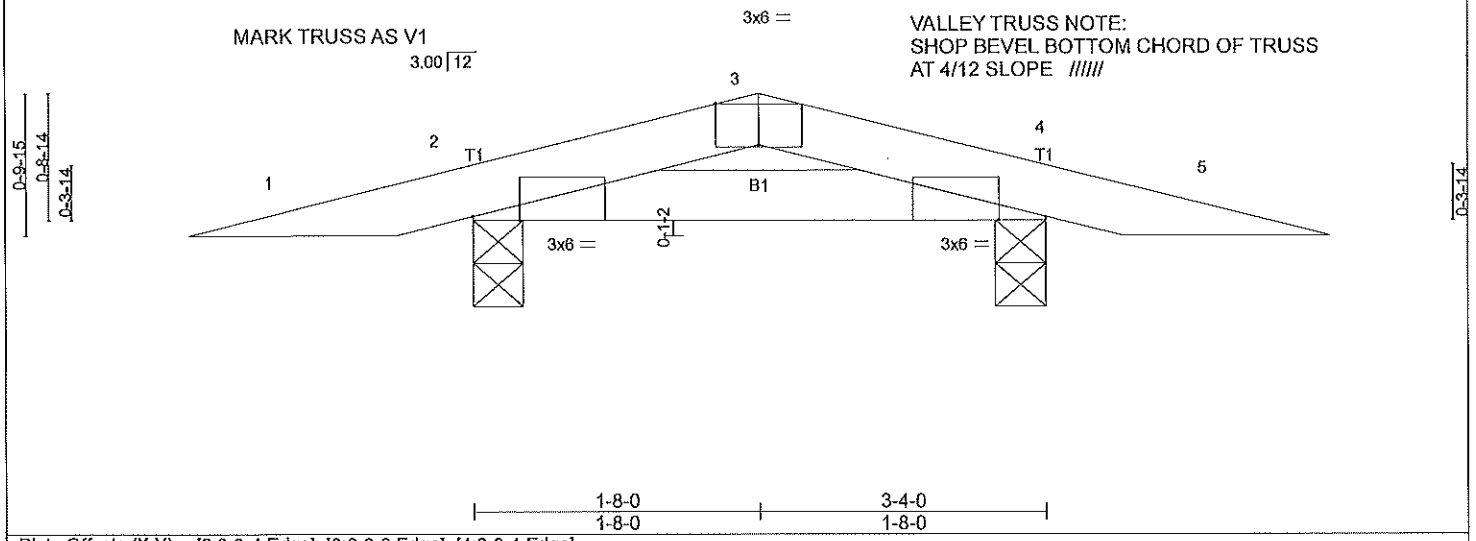

Plate Offsets (X,Y)-- [2:0-3-4,Edge], [3:0-3-0,Edge], [4:0-3-4,Edge]

LOADING (psf)		SPACING-	3-0-0	CSI.		DEFL.	in	(loc)	l/defl	L/d	PLATES	GRIP
TCLL (roof)	30.0	Plate Grip DOL	1.15	TC	0.13	Vert(LL)	0.00	8	>999	360	MT20	220/190
Snow (Ps/Pg)	29.4/35.0	Lumber DOL	1.15	BC	0.05	Vert(CT)	-0.00	8	>999	180		
TCDL	4.0	Rep Stress Incr	NO	WB	0.00	Horz(CT)	0.00	4	n/a	n/a		
BCLL	0.0	Code	IBC2021/TPI2014	Matrix-MP							Weight: 15 lb	FT = 10%
BCDL	1.0											

LUMBER-
TOP CHORD 2x4 #1 Lester
BOT CHORD 2x4 #1 Lester

BRACING-
TOP CHORD 2-0-0 oc purlins.
BOT CHORD 3-0-0 oc bracing.

REACTIONS. (lb/size) 2=277/0-3-8 (min. 0-1-8), 4=277/0-3-8 (min. 0-1-8)
Max Horz 2=16(LC 7)
Max Uplift 2=-112(LC 7), 4=-112(LC 8)
Max Grav 2=339(LC 16), 4=339(LC 17)

FORCES. (lb) - Max. Comp./Max. Ten. - All forces 250 (lb) or less except when shown.

NOTES-
1) This truss has been checked for uniform roof live load only, except as noted.
2) Wind: ASCE 7-16; Vult=115mph (3-second gust) Vasd=91mph; TCDL=2.4psf; BCDL=0.6psf; h=22ft; Cat. II; Exp C; Enclosed; MWFRS (envelope); cantilever left and right exposed ; end vertical left and right exposed; Lumber DOL=1.33 plate grip DOL=1.33
3) TCLL: ASCE 7-16; Pr=30.0 psf (roof LL: Lum DOL=1.15 Plate DOL=1.15); Pg=35.0 psf; Ps=29.4 psf (Lum DOL=1.15 Plate DOL=1.15); Is=1.0; Rough Cat C; Partially Exp.; Ce=1.0; Cs=1.00; Ct=1.20; Unobstructed slippery surface
4) Roof design snow load has been reduced to account for slope.
5) Unbalanced snow loads have been considered for this design.
6) This truss has been designed for greater of min roof live load of 12.0 psf or 1.00 times flat roof load of 29.4 psf on overhangs non-concurrent with other live loads.
7) The bottom chord dead load shown is sufficient only to cover the truss weight itself and does not allow for any additional load to be added to the bottom chord.
8) Dead loads shown include weight of truss. Top chord dead load of 5.0 psf (or less) is not adequate for a shingle roof. Architect to verify adequacy of top chord dead load.
9) Provide mechanical connection (by others) of truss to bearing plate capable of withstanding 112 lb uplift at joint 2 and 112 lb uplift at joint 4.
10) See Standard Industry Piggyback Truss Connection Detail for Connection to base truss as applicable, or consult qualified building designer.
11) Graphical purlin representation does not depict the size or the orientation of the purlin along the top and/or bottom chord.

LOAD CASE(S) Standard

Job	Truss	Truss Type	Qty	Ply	PREHN BUILDING SYSTEMS/SERVICE MASTER
637515	V2-C102	VALLEY	1	1	V2 - 3/12 Valley Truss to 4/12 Roof Job Reference (optional)

Lester Building Systems, LLC, Lester Prairie, MN, 55354 TTP x5237 — 25.1.0 e Apr 28 2025 MiTek Industries, Inc. Fri Aug 28 10:49:22 2026 Page 1
ID:UtDr6U4zmGuHH?iSwNaoScynZdv-HKKQjbpwXW66er_72qSDHVa5OTWmawn_Z7Xa0JyjLBx

-1-7-13 | 2-8-0 | 5-8-0 | 8-8-0 | 11-4-0 | 12-11-13
1-7-13 | 2-8-0 | 3-0-0 | 3-0-0 | 2-8-0 | 1-7-13

Scale: 1/2"=1'

MARK TRUSS AS V2

VALLEY TRUSS NOTE:
SHOP BEVEL BOTTOM CHORD OF TRUSS
AT 4/12 SLOPE //////

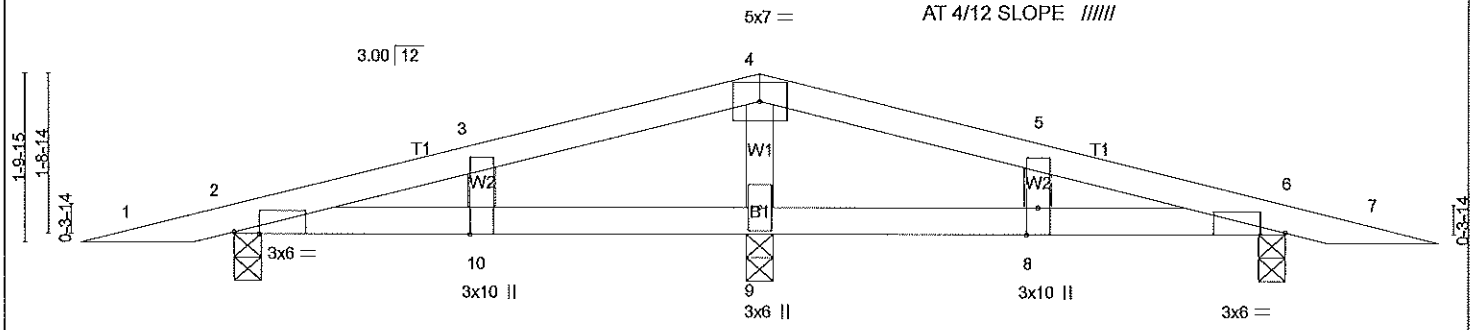

2-8-0 | 5-8-0 | 8-8-0 | 11-4-0
2-8-0 | 3-0-0 | 3-0-0 | 2-8-0

Plate Offsets (X,Y)-- [2:0-3-4,Edge], [6:0-3-4,Edge], [10:0-0-4,Edge]

LOADING (psf)		SPACING-	3-0-0	CSI.		DEFL.	in	(loc)	l/defl	L/d	PLATES	GRIP
TCLL (roof)	30.0	Plate Grip DOL	1.15	TC	0.42	Vert(LL)	-0.10	10	>664	360	MT20	220/190
Snow (Ps/Pg)	29.4/35.0	Lumber DOL	1.15	BC	0.49	Vert(CT)	-0.11	8	>618	180		
TCDL	4.0	Rep Stress Incr	NO	WB	0.06	Horz(CT)	0.00	2	n/a	n/a		
BCLL	0.0	Code IBC2021/TPI2014		Matrix-MR							Weight: 42 lb	FT = 10%
BCDL	1.0											

LUMBER-
TOP CHORD 2x4 #1 Lester
BOT CHORD 2x4 #1 Lester
WEBS 2x4 #2 Lester

BRACING-
TOP CHORD 2-0-0 oc purlins (6-0-0 max.).
BOT CHORD 3-0-0 oc bracing.

REACTIONS. (lb/size) 2=353/0-3-8 (min. 0-1-8), 6=353/0-3-8 (min. 0-1-8), 9=673/0-3-8 (min. 0-1-8)
Max Horz 2=28(LC 7)
Max Uplift2=-141(LC 7), 6=-144(LC 8), 9=-168(LC 7)
Max Grav 2=527(LC 16), 6=527(LC 17), 9=685(LC 2)

FORCES. (lb) - Max. Comp./Max. Ten. - All forces 250 (lb) or less except when shown.
WEBS 4-9=-483/122

NOTES-
1) This truss has been checked for uniform roof live load only, except as noted.
2) Wind: ASCE 7-16; Vult=115mph (3-second gust) Vasd=91mph; TCDL=2.4psf; BCDL=0.6psf; h=22ft; Cat. II; Exp C; Enclosed; MWFRS (envelope); cantilever left and right exposed ; end vertical left and right exposed; Lumber DOL=1.33 plate grip DOL=1.33
3) TCLL: ASCE 7-16; Pr=30.0 psf (roof LL: Lum DOL=1.15 Plate DOL=1.15); Pg=35.0 psf; Ps=29.4 psf (Lum DOL=1.15 Plate DOL=1.15); Is=1.0; Rough Cat C; Partially Exp.; Ce=1.0; Cs=1.00; Ct=1.20; Unobstructed slippery surface
4) Roof design snow load has been reduced to account for slope.
5) Unbalanced snow loads have been considered for this design.
6) This truss has been designed for greater of min roof live load of 12.0 psf or 1.00 times flat roof load of 29.4 psf on overhangs non-concurrent with other live loads.
7) The bottom chord dead load shown is sufficient only to cover the truss weight itself and does not allow for any additional load to be added to the bottom chord.
8) Dead loads shown include weight of truss. Top chord dead load of 5.0 psf (or less) is not adequate for a shingle roof. Architect to verify adequacy of top chord dead load.
9) Provide mechanical connection (by others) of truss to bearing plate capable of withstanding 141 lb uplift at joint 2, 144 lb uplift at joint 6 and 168 lb uplift at joint 9.
10) See Standard Industry Piggyback Truss Connection Detail for Connection to base truss as applicable, or consult qualified building designer.
11) Graphical purlin representation does not depict the size or the orientation of the purlin along the top and/or bottom chord.

LOAD CASE(S) Standard

Job	Truss	Truss Type	Qty	Ply	PREHN BUILDING SYSTEMS/SERVICE MASTER
637515	V3-C103	VALLEY	1	1	V3 - 3/12 Valley Truss to 4/12 Roof Job Reference (optional)

Lester Building Systems, LLC, Lester Prairie, MN, 55354 TTP x5237 — 25.1.0 e Apr 28 2025 MiTek Industries, Inc. Fri Aug 28 10:50:13 2026 Page 1
ID:UtDr6U4zmGuHH?iSwNaoScynZdv-H8viQ1RvWBYtFgNwX2tArGBsf0?_1_SUtYOmKsyjLB8

-1-7-13	3-8-0	6-8-0	9-8-0	12-8-0	15-8-0	19-4-0	20-11-13
1-7-13	3-8-0	3-0-0	3-0-0	3-0-0	3-0-0	3-8-0	1-7-13

Scale = 1:37.0

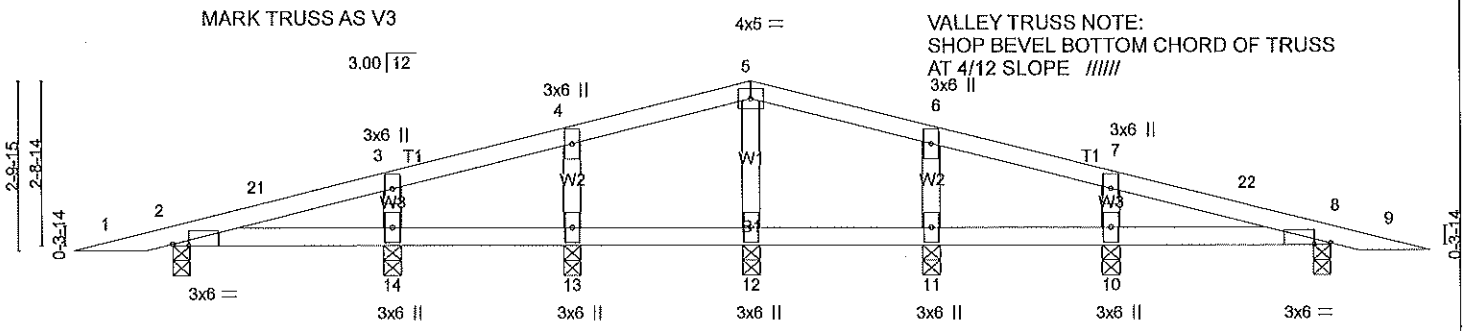

3-8-0	6-8-0	9-8-0	12-8-0	15-8-0	19-4-0
3-8-0	3-0-0	3-0-0	3-0-0	3-0-0	3-8-0

Plate Offsets (X,Y)-- [2:0-3-4,Edge], [8:0-3-4,Edge]

LOADING (psf)		SPACING-	3-0-0	CSI.		DEFL.	in	(loc)	l/defl	L/d	PLATES	GRIP
TCLL (roof)	30.0	Plate Grip DOL	1.15	TC	0.22	Vert(LL)	-0.01	10-20	>999	360	MT20	220/190
Snow (Ps/Pg)	29.4/35.0	Lumber DOL	1.15	BC	0.15	Vert(CT)	-0.01	14-17	>999	180		
TCDL	4.0	Rep Stress Incr	NO	WB	0.05	Horz(CT)	0.00	8	n/a	n/a		
BCLL	0.0	Code	IBC2021/TPI2014	Matrix-MR							Weight: 73 lb	FT = 10%
BCDL	1.0											

LUMBER-
TOP CHORD 2x4 #1 Lester
BOT CHORD 2x4 #1 Lester
WEBS 2x4 #2 Lester

BRACING-
TOP CHORD 2-0-0 oc purlins (6-0-0 max.).
BOT CHORD 3-0-0 oc bracing.

REACTIONS. All bearings 0-3-8.
(lb) - Max Horz 2=41(LC 11)
Max Uplift All uplift 100 lb or less at joint(s) 12 except 2=-110(LC 7), 8=-114(LC 8), 11=-102(LC 8), 13=-102(LC 7), 14=-129(LC 11), 10=-129(LC 12)
Max Grav All reactions 250 lb or less at joint(s) except 2=296(LC 16), 8=296(LC 17), 12=319(LC 2), 11=432(LC 17), 13=432(LC 16), 14=514(LC 16), 10=514(LC 17)

FORCES. (lb) - Max. Comp./Max. Ten. - All forces 250 (lb) or less except when shown.
WEBS 5-12=-303/62, 6-11=-439/111, 4-13=-439/111, 3-14=-451/119, 7-10=-451/119

NOTES-
1) This truss has been checked for uniform roof live load only, except as noted.
2) Wind: ASCE 7-16; Vult=115mph (3-second gust) Vasd=91mph; TCDL=2.4psf; BCDL=0.6psf; h=22ft; Cat. II; Exp C; Enclosed; MWFRS (envelope); cantilever left and right exposed ; end vertical left and right exposed; Lumber DOL=1.33 plate grip DOL=1.33
3) TCLL: ASCE 7-16; Pr=30.0 psf (roof LL: Lum DOL=1.15 Plate DOL=1.15); Pg=35.0 psf; Ps=29.4 psf (Lum DOL=1.15 Plate DOL=1.15); Is=1.0; Rough Cat C; Partially Exp.; Ce=1.0; Cs=1.00; Ct=1.20; Unobstructed slippery surface
4) Roof design snow load has been reduced to account for slope.
5) Unbalanced snow loads have been considered for this design.
6) This truss has been designed for greater of min roof live load of 12.0 psf or 1.00 times flat roof load of 29.4 psf on overhangs non-concurrent with other live loads.
7) The bottom chord dead load shown is sufficient only to cover the truss weight itself and does not allow for any additional load to be added to the bottom chord.
8) Dead loads shown include weight of truss. Top chord dead load of 5.0 psf (or less) is not adequate for a shingle roof. Architect to verify adequacy of top chord dead load.
9) Provide mechanical connection (by others) of truss to bearing plate capable of withstanding 100 lb uplift at joint(s) 12 except (jt=lb) 2=110, 8=114, 11=102, 13=102, 14=129, 10=129.
10) See Standard Industry Piggyback Truss Connection Detail for Connection to base truss as applicable, or consult qualified building designer.
11) Graphical purlin representation does not depict the size or the orientation of the purlin along the top and/or bottom chord.

LOAD CASE(S) Standard

Job	Truss	Truss Type	Qty	Ply	PREHN BUILDING SYSTEMS/SERVICE MASTER
637515	V4-C104	VALLEY	1	1	V4 - 3/12 Valley Truss to 4/12 Roof Job Reference (optional)

Lester Building Systems, LLC, Lester Prairie, MN, 55354 TTP x5237 — 25.1.0 e Apr 28 2025 MiTek Industries, Inc. Fri Aug 28 10:52:16 2026 Page 1
ID:94dMcHg8wWOhV7Gd5ORWFEynZbs-BoqCE5w3Y_1QWaHZENa0KCnqScwxLcEbaBhn8EyjL9D

-1-7-13	4-8-0	7-8-0	10-8-0	13-8-0	16-8-0	19-8-0	22-8-0	27-4-0	28-11-13
1-7-13	4-8-0	3-0-0	3-0-0	3-0-0	3-0-0	3-0-0	3-0-0	4-8-0	1-7-13

Scale = 1:50.1

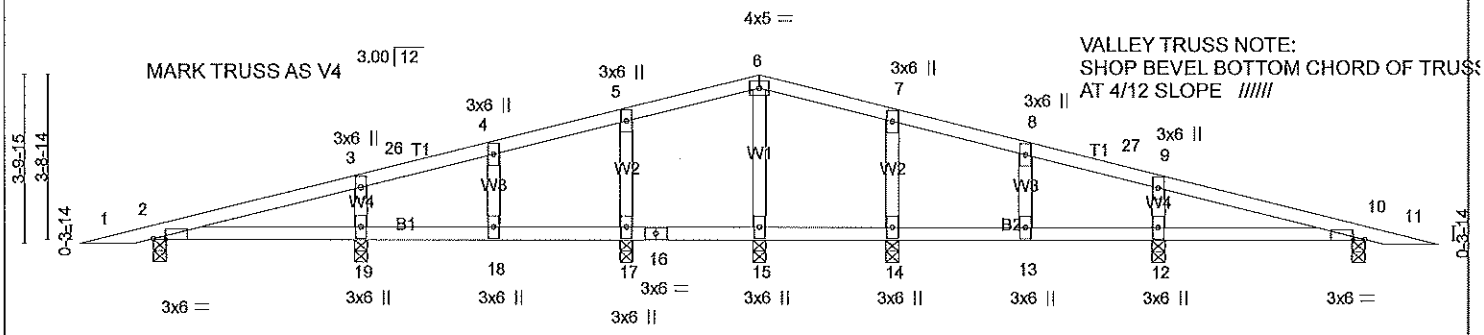

4-8-0	7-8-0	10-8-0	13-8-0	16-8-0	19-8-0	22-8-0	27-4-0
4-8-0	3-0-0	3-0-0	3-0-0	3-0-0	3-0-0	3-0-0	4-8-0

Plate Offsets (X,Y)-- [2:0-3-4,Edge], [10:0-3-4,Edge]

LOADING (psf)		SPACING-	3-0-0	CSI.		DEFL.	in	(loc)	l/defl	L/d	PLATES	GRIP
TCLL (roof)	30.0	Plate Grip DOL	1.15	TC	0.42	Vert(LL)	-0.07	18	>997	360	MT20	220/190
Snow (Ps/Pg)	29.4/35.0	Lumber DOL	1.15	BC	0.40	Vert(CT)	-0.08	18	>903	180		
TCDL	4.0	Rep Stress Incr	NO	WB	0.10	Horz(CT)	0.00	10	n/a	n/a		
BCLL	0.0	Code IBC2021/TPI2014		Matrix-MR							Weight: 107 lb	FT = 10%
BCDL	1.0											

LUMBER-
TOP CHORD 2x4 #1 Lester
BOT CHORD 2x4 #1 Lester
WEBS 2x4 #2 Lester

BRACING-
TOP CHORD 2-0-0 oc purlins (6-0-0 max.).
BOT CHORD 3-0-0 oc bracing.

REACTIONS. All bearings 0-3-8.
(lb) - Max Horz 2=-56(LC 12)
Max Uplift All uplift 100 lb or less at joint(s) except 10=-115(LC 8), 2=-108(LC 7), 17=-184(LC 7), 14=-184(LC 8), 19=-210(LC 11), 12=-209(LC 12)
Max Grav All reactions 250 lb or less at joint(s) 15 except 10=300(LC 2), 2=300(LC 2), 17=776(LC 16), 14=776(LC 17), 19=711(LC 16), 12=711(LC 17)

FORCES. (lb) - Max. Comp./Max. Ten. - All forces 250 (lb) or less except when shown.
WEBS 5-17=-604/150, 7-14=-604/150, 3-19=-528/168, 9-12=-528/168

NOTES-
1) This truss has been checked for uniform roof live load only, except as noted.
2) Wind: ASCE 7-16; Vult=115mph (3-second gust) Vasd=91mph; TCDL=2.4psf; BCDL=0.6psf; h=22ft; Cat. II; Exp C; Enclosed; MWFRS (envelope); cantilever left and right exposed ; end vertical left and right exposed; Lumber DOL=1.33 plate grip DOL=1.33
3) TCLL: ASCE 7-16; Pr=30.0 psf (roof LL: Lum DOL=1.15 Plate DOL=1.15); Pg=35.0 psf; Ps=29.4 psf (Lum DOL=1.15 Plate DOL=1.15); Is=1.0; Rough Cat C; Partially Exp.; Ce=1.0; Cs=1.00; Ct=1.20; Unobstructed slippery surface
4) Roof design snow load has been reduced to account for slope.
5) Unbalanced snow loads have been considered for this design.
6) This truss has been designed for greater of min roof live load of 12.0 psf or 1.00 times flat roof load of 29.4 psf on overhangs non-concurrent with other live loads.
7) The bottom chord dead load shown is sufficient only to cover the truss weight itself and does not allow for any additional load to be added to the bottom chord.
8) Dead loads shown include weight of truss. Top chord dead load of 5.0 psf (or less) is not adequate for a shingle roof. Architect to verify adequacy of top chord dead load.
9) Provide mechanical connection (by others) of truss to bearing plate capable of withstanding 115 lb uplift at joint 10, 108 lb uplift at joint 2, 184 lb uplift at joint 17, 184 lb uplift at joint 14, 210 lb uplift at joint 19 and 209 lb uplift at joint 12.
10) See Standard Industry Piggyback Truss Connection Detail for Connection to base truss as applicable, or consult qualified building designer.
11) Graphical purlin representation does not depict the size or the orientation of the purlin along the top and/or bottom chord.

LOAD CASE(S) Standard

Job	Truss	Truss Type	Qty	Ply	PREHN BUILDING SYSTEMS/SERVICE MASTER
637515	V5-C105	VALLEY	1	1	V5 - 3/12 Valley Truss to 4/12 Roof Job Reference (optional)

Lester Building Systems, LLC, Lester Prairie, MN, 55354 TTP x5237

25.1.0 e Apr 28 2025 MiTek Industries, Inc. Fri Aug 28 10:53:23 2026 Page 1
ID:2OwkaH7_zCBi2zAxJN6QoFynZbG-jhOXI?k5mZUw2tvRfyHkYK2K_ctJYvaS_6Qq?ryjL8A

1-7-13	2-8-0	5-8-0	8-8-0	11-8-0	14-8-0	17-8-0	20-8-0	23-8-0	26-8-0	29-8-0	32-8-0	35-4-0	36-11-13
1-7-13	2-8-0	3-0-0	3-0-0	3-0-0	3-0-0	3-0-0	3-0-0	3-0-0	3-0-0	3-0-0	3-0-0	2-8-0	1-7-13

Scale = 1:63.2

MARK TRUSS AS V5

3.00 12

5x5 =

VALLEY TRUSS NOTE:
SHOP BEVEL BOTTOM CHORD OF TRUSS
AT 4/12 SLOPE //////

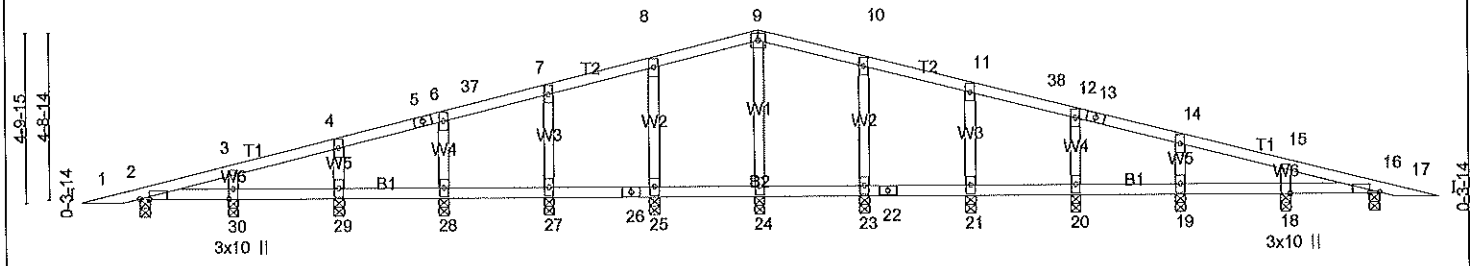

2-8-0	5-8-0	8-8-0	11-8-0	14-8-0	17-8-0	20-8-0	23-8-0	26-8-0	29-8-0	32-8-0	35-4-0
2-8-0	3-0-0	3-0-0	3-0-0	3-0-0	3-0-0	3-0-0	3-0-0	3-0-0	3-0-0	3-0-0	2-8-0

Plate Offsets (X,Y)-- [2:0-3-4,Edge], [16:0-3-4,Edge], [18:0-0-4,Edge]

LOADING (psf)		SPACING-	3-0-0	CSI.		DEFL.	in	(loc)	l/defl	L/d	PLATES	GRIP
TCLL (roof)	30.0	Plate Grip DOL	1.15	TC	0.20	Vert(LL)	0.00	33	>999	360	MT20	220/190
Snow (Ps/Pg)	29.4/35.0	Lumber DOL	1.15	BC	0.03	Vert(CT)	-0.00	36	>999	180		
TCDL	4.0	Rep Stress Incr	NO	WB	0.11	Horz(CT)	0.00	16	n/a	n/a		
BCLL	0.0	Code	IBC2021/TPI2014	Matrix-MR							Weight: 147 lb	FT = 10%
BCDL	1.0											

LUMBER-
TOP CHORD 2x4 #1 Lester
BOT CHORD 2x4 #1 Lester
WEBS 2x4 #2 Lester

BRACING-
TOP CHORD 2-0-0 oc purlins (6-0-0 max.).
BOT CHORD 3-0-0 oc bracing.

REACTIONS. All bearings 0-3-8.
(lb) - Max Horz 2=71(LC 11)
Max Uplift All uplift 100 lb or less at joint(s) 16, 2, 24 except 27=-105(LC 7), 28=-105(LC 11), 29=-108(LC 7), 30=-103(LC 11), 25=-108(LC 11), 23=-107(LC 12), 21=-105(LC 8), 20=-105(LC 12), 19=-108(LC 8), 18=-103(LC 12)
Max Grav All reactions 250 lb or less at joint(s) 16, 2 except 24=309(LC 2), 27=435(LC 16), 28=339(LC 16), 29=319(LC 2), 30=300(LC 2), 25=456(LC 16), 23=456(LC 17), 21=435(LC 17), 20=339(LC 17), 19=319(LC 2), 18=300(LC 2)

FORCES. (lb) - Max. Comp./Max. Ten. - All forces 250 (lb) or less except when shown.
WEBS 9-24=-300/40, 7-27=-426/110, 6-28=-329/110, 4-29=-313/114, 3-30=-276/101, 8-25=-447/113, 10-23=-447/113, 11-21=-426/111, 12-20=-329/110, 14-19=-313/114, 15-18=-276/101

NOTES-
1) This truss has been checked for uniform roof live load only, except as noted.
2) Wind: ASCE 7-16; Vult=115mph (3-second gust) Vasd=91mph; TCDL=2.4psf; BCDL=0.6psf; h=22ft; Cat. II; Exp C; Enclosed; MWFRS (envelope); cantilever left and right exposed ; end vertical left and right exposed; Lumber DOL=1.33 plate grip DOL=1.33
3) TCLL: ASCE 7-16; Pr=30.0 psf (roof LL: Lum DOL=1.15 Plate DOL=1.15); Pg=35.0 psf; Ps=29.4 psf (Lum DOL=1.15 Plate DOL=1.15); Is=1.0; Rough Cat C; Partially Exp.; Ce=1.0; Cs=1.00; Ct=1.20; Unobstructed slippery surface
4) Roof design snow load has been reduced to account for slope.
5) Unbalanced snow loads have been considered for this design.
6) This truss has been designed for greater of min roof live load of 12.0 psf or 1.00 times flat roof load of 29.4 psf on overhangs non-concurrent with other live loads.
7) The bottom chord dead load shown is sufficient only to cover the truss weight itself and does not allow for any additional load to be added to the bottom chord.
8) Dead loads shown include weight of truss. Top chord dead load of 5.0 psf (or less) is not adequate for a shingle roof. Architect to verify adequacy of top chord dead load.
9) All plates are 3x6 MT20 unless otherwise indicated.
10) Provide mechanical connection (by others) of truss to bearing plate capable of withstanding 100 lb uplift at joint(s) 16, 2, 24 except (jt=lb) 27=105, 28=105, 29=108, 30=103, 25=108, 23=107, 21=105, 20=105, 19=108, 18=103.
11) See Standard Industry Piggyback Truss Connection Detail for Connection to base truss as applicable, or consult qualified building designer.
12) Graphical purlin representation does not depict the size or the orientation of the purlin along the top and/or bottom chord.

LOAD CASE(S) Standard

Job	Truss	Truss Type	Qty	Ply	PREHN BUILDING SYSTEMS/SERVICE MASTER
637515	V6-C106	VALLEY	1	1	V6 - 3/12 Valley Truss to 4/12 Roof Job Reference (optional)

Lester Building Systems, LLC, Lester Prairie, MN, 55354 TTP x5237 — 25.1.0 e Apr 28 2025 MiTek Industries, Inc. Fri Aug 28 10:54:45 2026 Page 1
ID:SWfjLwaBGZr2_fV2_eH5o2ynZah-KTLXW2jXSmpHuUACTAlztdSLDgr6m_rWrtHAs5yjL6u

-1-7-13 3-8-0 6-8-0 9-8-0 12-8-0 15-8-0 18-8-0 21-8-0 24-8-0 27-8-0 30-8-0 33-8-0 36-8-0 39-8-0 43-4-0 44-11-13
1-7-13 3-8-0 3-0-0 3-0-0 3-0-0 3-0-0 3-0-0 3-0-0 3-0-0 3-0-0 3-0-0 3-0-0 3-0-0 3-0-0 3-8-0 1-7-13

Scale = 1:76.3

MARK TRUSS AS V6

VALLEY TRUSS NOTE:
SHOP BEVEL BOTTOM CHORD OF TRUSS
AT 4/12 SLOPE ////

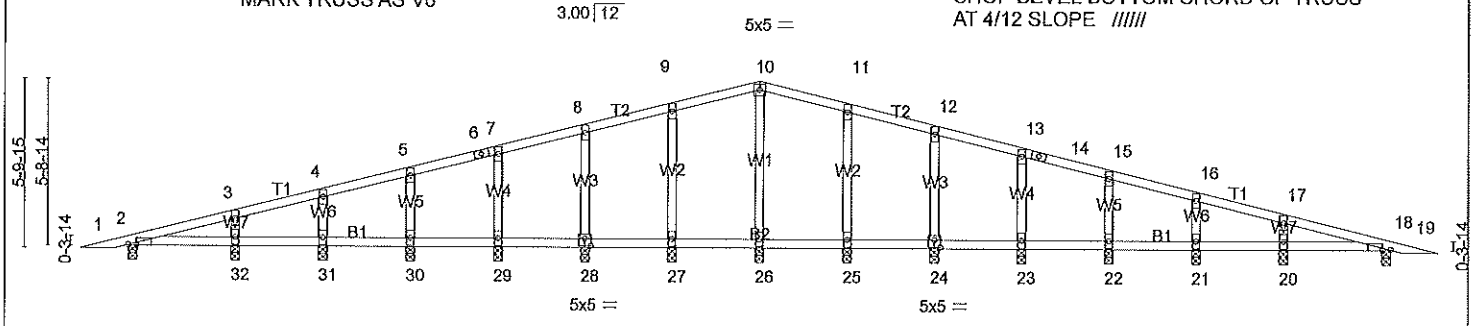

3-8-0 6-8-0 9-8-0 12-8-0 15-8-0 18-8-0 21-8-0 24-8-0 27-8-0 30-8-0 33-8-0 36-8-0 39-8-0 43-4-0
3-8-0 3-0-0 3-0-0 3-0-0 3-0-0 3-0-0 3-0-0 3-0-0 3-0-0 3-0-0 3-0-0 3-0-0 3-0-0 3-8-0

Plate Offsets (X,Y)-- [2:0-3-4,Edge], [18:0-3-4,Edge], [24:0-2-8,0-3-0], [28:0-2-8,0-3-0]

LOADING (psf)		SPACING-	3-0-0	CSI.		DEFL.	in	(loc)	l/defl	L/d	PLATES	GRIP
TCLL (roof)	30.0	Plate Grip DOL	1.15	TC	0.21	Vert(LL)	-0.01	20-35	>999	360	MT20	220/190
Snow (Ps/Pg)	29.4/35.0	Lumber DOL	1.15	BC	0.12	Vert(CT)	-0.01	20-35	>999	180		
TCDL	4.0	Rep Stress Incr	NO	WB	0.18	Horz(CT)	0.00	18	n/a	n/a		
BCLL	0.0	Code IBC2021/TPI2014		Matrix-MR							Weight: 189 lb	FT = 10%
BCDL	1.0											

LUMBER-
TOP CHORD 2x4 #1 Lester
BOT CHORD 2x4 #1 Lester
WEBS 2x4 #2 Lester

BRACING-
TOP CHORD 2-0-0 oc purlins (6-0-0 max.).
BOT CHORD 3-0-0 oc bracing.

REACTIONS. All bearings 0-3-8.
(lb) - Max Horz 2=87(LC 13)
Max Uplift All uplift 100 lb or less at joint(s) 26, 31, 21, 2 except 18=-104(LC 8), 28=-105(LC 7), 29=-105(LC 7), 30=-107(LC 11), 27=-107(LC 11), 25=-107(LC 12), 24=-105(LC 8), 23=-105(LC 8), 22=-107(LC 12), 32=-131(LC 11), 20=-130(LC 12)
Max Grav All reactions 250 lb or less at joint(s) except 18=286(LC 2), 26=309(LC 2), 28=452(LC 16), 29=379(LC 16), 30=320(LC 2), 31=294(LC 2), 27=466(LC 16), 25=466(LC 17), 24=452(LC 17), 23=379(LC 17), 22=320(LC 2), 21=294(LC 2), 32=383(LC 2), 20=383(LC 2), 2=286(LC 2)

FORCES. (lb) - Max. Comp./Max. Ten. - All forces 250 (lb) or less except when shown.
WEBS 10-26=-300/29, 8-28=-443/110, 7-29=-370/110, 5-30=-308/111, 4-31=-298/109, 9-27=-457/113, 11-25=-457/112, 12-24=-443/111, 13-23=-370/110, 15-22=-308/111, 16-21=-298/109, 3-32=-331/120, 17-20=-331/120

NOTES-
1) This truss has been checked for uniform roof live load only, except as noted.
2) Wind: ASCE 7-16; Vult=115mph (3-second gust) Vasd=91mph; TCDL=2.4psf; BCDL=0.6psf; h=22ft; Cat. II; Exp C; Enclosed; MWFRS (envelope); cantilever left and right exposed ; end vertical left and right exposed; Lumber DOL=1.33 plate grip DOL=1.33
3) TCLL: ASCE 7-16; Pr=30.0 psf (roof LL: Lum DOL=1.15 Plate DOL=1.15); Pg=35.0 psf; Ps=29.4 psf (Lum DOL=1.15 Plate DOL=1.15); Is=1.0; Rough Cat C; Partially Exp.; Ce=1.0; Cs=1.00; Ct=1.20; Unobstructed slippery surface
4) Roof design snow load has been reduced to account for slope.
5) Unbalanced snow loads have been considered for this design.
6) This truss has been designed for greater of min roof live load of 12.0 psf or 1.00 times flat roof load of 29.4 psf on overhangs non-concurrent with other live loads.
7) The bottom chord dead load shown is sufficient only to cover the truss weight itself and does not allow for any additional load to be added to the bottom chord.
8) Dead loads shown include weight of truss. Top chord dead load of 5.0 psf (or less) is not adequate for a shingle roof. Architect to verify adequacy of top chord dead load.
9) All plates are 3x6 MT20 unless otherwise indicated.
10) Provide mechanical connection (by others) of truss to bearing plate capable of withstanding 100 lb uplift at joint(s) 26, 31, 21, 2 except (jt=lb) 18=104, 28=105, 29=105, 30=107, 27=107, 25=107, 24=105, 23=105, 22=107, 32=131, 20=130.
11) See Standard Industry Piggyback Truss Connection Detail for Connection to base truss as applicable, or consult qualified building designer.
12) Graphical purlin representation does not depict the size or the orientation of the purlin along the top and/or bottom chord.

LOAD CASE(S) Standard

Job	Truss	Truss Type	Qty	Ply	PREHN BUILDING SYSTEMS/SERVICE MASTER
637515	V7-C107	VALLEY	2	1	Job Reference (optional)

Lester Building Systems, LLC, Lester Prairie, MN, 55354 TTP x5237 — 25.1.0 e Apr 28 2025 MiTek Industries, Inc. Fri Aug 28 10:55:38 2026 Page 1
ID:aHT3eBx0BndnbGoplxp80NynZaD-Gg2ZdANm_2UmldjO3oCOWo8O71vhhwXK1cdTEXyjL63

-1-7-13	4-8-0	7-8-0	10-8-0	13-8-0	16-8-0	19-8-0	22-8-0	25-8-0
1-7-13	4-8-0	3-0-0	3-0-0	3-0-0	3-0-0	3-0-0	3-0-0	3-0-0

Scale = 1:45.6

VALLEY TRUSS NOTE:
SHOP BEVEL BOTTOM CHORD OF TRUSS AT 4/12 SLOPE ////// (BEVEL 1 RIGHT 1 LEFT)

MARK TRUSS AS V7
1/4" BUTT CUT AT ENDS OF BOTTOM CHORD

EST NOTE:
See Detail GA544 for "EL" Brace Length

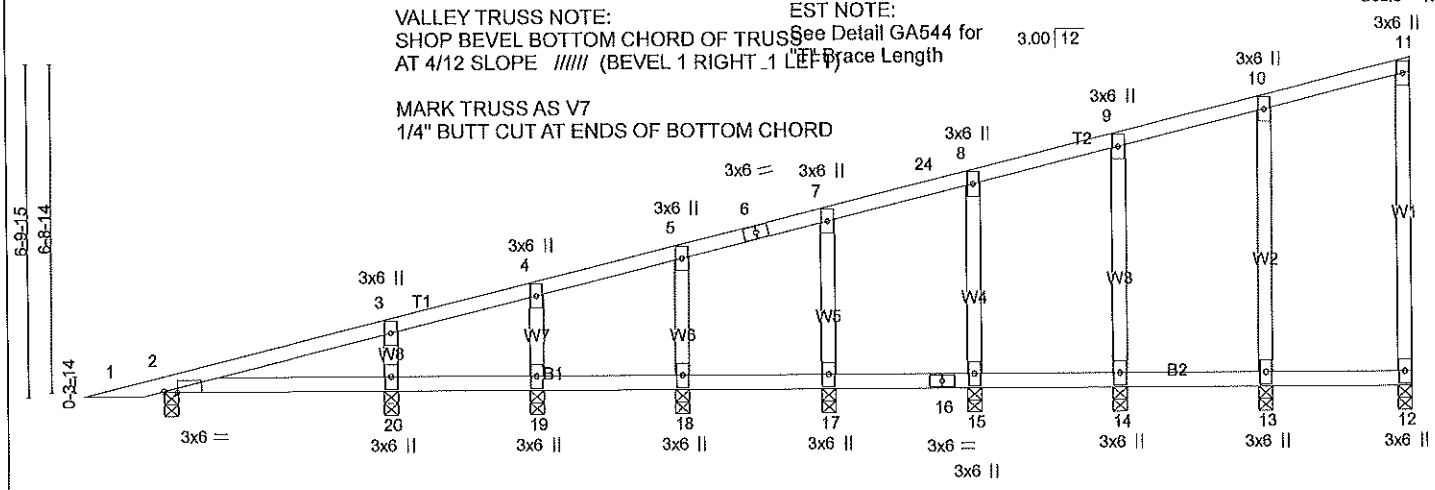

4-8-0	7-8-0	10-8-0	13-8-0	16-8-0	19-8-0	22-8-0	25-8-0
4-8-0	3-0-0	3-0-0	3-0-0	3-0-0	3-0-0	3-0-0	3-0-0

Plate Offsets (X,Y)-- [2:0-3-4,Edge]

LOADING (psf)		SPACING-	3-0-0	CSI.		DEFL.	in	(loc)	l/defl	L/d	PLATES	GRIP
TCLL (roof)	30.0	Plate Grip DOL	1.15	TC	0.25	Vert(LL)	-0.02	20-23	>999	360	MT20	220/190
Snow (Ps/Pg)	29.4/35.0	Lumber DOL	1.15	BC	0.24	Vert(CT)	-0.03	20-23	>999	180		
TCDL	4.0	Rep Stress Incr	NO	WB	0.27	Horz(CT)	-0.00	12	n/a	n/a		
BCLL	0.0	Code IBC2021/TPI2014		Matrix-MR							Weight: 122 lb	FT = 10%
BCDL	1.0											

LUMBER-
TOP CHORD 2x4 #1 Lester
BOT CHORD 2x4 #1 Lester
WEBS 2x4 #2 Lester

BRACING-
TOP CHORD 2-0-0 oc purlins (6-0-0 max.), except end verticals.
BOT CHORD 3-0-0 oc bracing.

REACTIONS. All bearings 0-3-8.
(lb) - Max Horz 2=309(LC 10)
Max Uplift All uplift 100 lb or less at joint(s) 2, 12, 19 except 20=-163(LC 11), 18=-111(LC 11), 17=-104(LC 7), 15=-106(LC 7), 14=-104(LC 11), 13=-109(LC 7)
Max Grav All reactions 250 lb or less at joint(s) 12 except 2=324(LC 2), 20=479(LC 2), 19=255(LC 2), 18=331(LC 2), 17=311(LC 2), 15=429(LC 16), 14=465(LC 16), 13=479(LC 16)

FORCES. (lb) - Max. Comp./Max. Ten. - All forces 250 (lb) or less except when shown.
WEBS 3-20=-403/145, 4-19=-272/100, 5-18=-315/114, 7-17=-304/110, 8-15=-420/109, 9-14=-454/119, 10-13=-476/102

NOTES-
1) This truss has been checked for uniform roof live load only, except as noted.
2) Wind: ASCE 7-16; Vult=115mph (3-second gust) Vasd=91mph; TCDL=2.4psf; BCDL=0.6psf; h=22ft; Cat. II; Exp C; Enclosed; MWFRS (envelope); cantilever left and right exposed ; end vertical left and right exposed; Lumber DOL=1.33 plate grip DOL=1.33
3) TCLL: ASCE 7-16; Pr=30.0 psf (roof LL: Lum DOL=1.15 Plate DOL=1.15); Pg=35.0 psf; Ps=29.4 psf (Lum DOL=1.15 Plate DOL=1.15); Is=1.0; Rough Cat C; Partially Exp.; Ce=1.0; Cs=1.00; Ct=1.20; Unobstructed slippery surface
4) Roof design snow load has been reduced to account for slope.
5) Unbalanced snow loads have been considered for this design.
6) This truss has been designed for greater of min roof live load of 12.0 psf or 1.00 times flat roof load of 29.4 psf on overhangs non-concurrent with other live loads.
7) The bottom chord dead load shown is sufficient only to cover the truss weight itself and does not allow for any additional load to be added to the bottom chord.
8) Dead loads shown include weight of truss. Top chord dead load of 5.0 psf (or less) is not adequate for a shingle roof. Architect to verify adequacy of top chord dead load.
9) Provide mechanical connection (by others) of truss to bearing plate capable of withstanding 100 lb uplift at joint(s) 2, 12, 19 except (jt=lb) 20=163, 18=111, 17=104, 15=106, 14=104, 13=109.
10) See Standard Industry Piggyback Truss Connection Detail for Connection to base truss as applicable, or consult qualified building designer.
11) Graphical purlin representation does not depict the size or the orientation of the purlin along the top and/or bottom chord.

LOAD CASE(S) Standard

LESTER BUILDINGS	FDA2 BUILDING LOADS	Job: 637515
		Page: 1 of 4
	Dealer: Prehn Building Systems Inc.	By: kfl
	Owner: Service Master	Date: 10/6/2026

BUILDING LOADS FOR FLEXIBLE DIAPHRAGM ANALYSIS 2

Building Geometry

Width = 64'-0" Length = 80'-1 1/2" Eave Height = 18'-11" Curb Height = 0'-0"
Roof Slope = 3 / 12 Overhangs: S1 = 2'-0" S2 = 2'-0" E1 = 0'-0" E2 = 1'-0"
Roof Peak Elevation = 18.92 + (64 / 2) x (3 / 12) = 26.92 ft
Projected Areas
Roof = (0 + 80.12 + 1) x (26.92 - 18.92) = 649 sqft
Roof OH S1 = (0 + 80.12 + 1) x (2 x 3 / 12) = 40.6 sqft
Roof OH S2 = (0 + 80.12 + 1) x (2 x 3 / 12) = 40.6 sqft
Side Wall S1 = 80.12 x (18.92 - 0) = 1515.7 sqft
Side Wall S2 = 80.12 x (18.92 - 0) = 1515.7 sqft
End Wall Gable = 64 x (26.92 - 18.92) / 2 = 256 sqft
End Wall E1 = 64 x (18.92 - 0) = 1210.7 sqft
End Wall E2 = 64 x (18.92 - 0) = 1210.7 sqft

Wind Perpendicular to Ridge

Load Case	Windward Wall (psf)	Windward OH (psf)	Net Roof (psf)	Leeward OH (psf)	Leeward Wall (psf)	Diaphragm Load (lb)
1	10.6	-22.32	0	-7.07	-3.05	7758.5
2	4.82	-22.32	0	-7.07	-8.83	7758.5
3	4.8	0	4.8	0	-4.8	8571.7
4	10.6	-22.32	0	-7.07	-3.05	7758.5
5	4.82	-22.32	0	-7.07	-8.83	7758.5
6	4.8	0	4.8	0	-4.8	8571.7

Case 1: Positive Direction - S1 Windward - Negative Internal Pressure
Case 2: Positive Direction - S1 Windward - Positive Internal Pressure
Case 3: Positive Direction - S1 Windward - Minimum Lateral Load
Case 4: Negative Direction - S2 Windward - Negative Internal Pressure
Case 5: Negative Direction - S2 Windward - Positive Internal Pressure
Case 6: Negative Direction - S2 Windward - Minimum Lateral Load

Wind Perpendicular to Ridge (Positive Direction - S1 Windward)

Governing Wind Load Case: Minimum Lateral Load

Windward Wall: S1
Base: Fixed Top: Pinned (No Knee Brace) No Curb
Wall Area: 1515.7 sqft
Proportion of Wind Load on Wall Height Supported by Eave
3/8 (Pinned Top : Fixed Base)
Diaphragm Load at Windward Eave = 4.8 psf x 3/8 x 1515.7 sqft
= 4.8 psf x 568.4 sqft
= 2728.3 lb

Diaphragm Load from Windward OH = 0 lb

Diaphragm Load from Roof = 4.8 psf x 649 sqft
= 3115.2 lb

Diaphragm Load from Leeward OH = 0 lb

LESTER BUILDINGS	FDA2 BUILDING LOADS	Job: 637515
		Page: 2 of 4
	Dealer: Prehn Building Systems Inc.	By: kfl
	Owner: Service Master	Date: 10/6/2026

BUILDING LOADS FOR FLEXIBLE DIAPHRAGM ANALYSIS 2 (Continued)

Leeward Wall: S2
Base: Fixed Top: Pinned (No Knee Brace) No Curb
Wall Area: 1515.7 sqft
Proportion of Wind Load on Wall Height Supported by Eave
3/8 (Pinned Top : Fixed Base)
Diaphragm Load at Leeward Eave = -(-4.8 psf x 3/8 x 1515.7 sqft)
= -(-4.8 psf x 568.4 sqft)
= 2728.3 lb

Total Diaphragm Load = 8571.7 lb = 2728.3 + 0 + 3115.2 + 0 + 2728.3 lb

Wind Perpendicular to Ridge (Negative Direction - S2 Windward)
Governing Wind Load Case: Minimum Lateral Load

Windward Wall: S2
Base: Fixed Top: Pinned (No Knee Brace) No Curb
Wall Area: 1515.7 sqft
Proportion of Wind Load on Wall Height Supported by Eave
3/8 (Pinned Top : Fixed Base)
Diaphragm Load at Windward Eave = 4.8 psf x 3/8 x 1515.7 sqft
= 4.8 psf x 568.4 sqft
= 2728.3 lb

Diaphragm Load from Windward OH = 0 lb

Diaphragm Load from Roof = 4.8 psf x 649 sqft
= 3115.2 lb

Diaphragm Load from Leeward OH = 0 lb

Leeward Wall: S1
Base: Fixed Top: Pinned (No Knee Brace) No Curb
Wall Area: 1515.7 sqft
Proportion of Wind Load on Wall Height Supported by Eave
3/8 (Pinned Top : Fixed Base)
Diaphragm Load at Leeward Eave = -(-4.8 psf x 3/8 x 1515.7 sqft)
= -(-4.8 psf x 568.4 sqft)
= 2728.3 lb

Total Diaphragm Load = 8571.7 lb = 2728.3 + 0 + 3115.2 + 0 + 2728.3 lb

Wind Parallel to Ridge

Load Case	Windward Wall (psf)	Leeward Wall (psf)	Diaphragm Load (lb)
1	9.31	-1.77	9543.8
2	3.53	-7.55	9543.8
3	4.8	-4.8	8269

Case 1: Both Directions - E1 or E2 Windward - Negative Internal Pressure
Case 2: Both Directions - E1 or E2 Windward - Positive Internal Pressure
Case 3: Both Directions - E1 or E2 Windward - Minimum Lateral Load

Wind Parallel to Ridge (Positive Direction - E1 Windward)
Governing Wind Load Case: Positive Internal Pressure

LESTER BUILDINGS	FDA2 BUILDING LOADS	Job: 637515
		Page: 3 of 4
	Dealer: Prehn Building Systems Inc.	By: kfl
	Owner: Service Master	Date: 10/6/2026

BUILDING LOADS FOR FLEXIBLE DIAPHRAGM ANALYSIS 2 (Continued)

Windward Wall: E1
Base: Fixed Top: Fixed No Curb
Wall Area: 1210.7 sqft Gable Area: 256 sqft
Diaphragm Load at Windward Eave = 3.53 psf x (1/2 x 1210.7 sqft + 256 sqft)
= 3.53 psf x 861.4 sqft
= 3040.6 lb

Leeward Wall: E2
Base: Fixed Top: Fixed No Curb
Wall Area: 1210.7 sqft Gable Area: 256 sqft
Diaphragm Load at Leeward Eave = -(-7.55 psf x (1/2 x 1210.7 sqft + 256 sqft)
= -(-7.55 psf x 861.4 sqft)
= 6503.2 lb

Total Diaphragm Load = 9543.8 lb = 3040.6 + 6503.2 lb

Wind Parallel to Ridge (Negative Direction - E2 Windward)
Governing Wind Load Case: Positive Internal Pressure

Windward Wall: E2
Base: Fixed Top: Fixed No Curb
Wall Area: 1210.7 sqft Gable Area: 256 sqft
Diaphragm Load at Windward Eave = 3.53 psf x (1/2 x 1210.7 sqft + 256 sqft)
= 3.53 psf x 861.4 sqft
= 3040.6 lb

Leeward Wall: E1
Base: Fixed Top: Fixed No Curb
Wall Area: 1210.7 sqft Gable Area: 256 sqft
Diaphragm Load at Leeward Eave = -(-7.55 psf x (1/2 x 1210.7 sqft + 256 sqft)
= -(-7.55 psf x 861.4 sqft)
= 6503.2 lb

Total Diaphragm Load = 9543.8 lb = 3040.6 + 6503.2 lb

FRAME LOADS

Wind Perpendicular to Ridge -

	Positive Direction (Windward Wall = S1)			Negative Direction (Windward Wall = S2)		
Frame	Windward Load (lb)	Leeward Load (lb)	Total Load (lb)	Windward Load (lb)	Leeward Load (lb)	Total Load (lb)
E1	187.9	187.9	375.8	-187.9	-187.9	-375.8
Int1	374.3	374.3	748.6	-374.3	-374.3	-748.6
Int2	372.7	372.7	745.4	-372.7	-372.7	-745.4
EP1	292.8	292.8	585.6	-292.8	-292.8	-585.6
Int4	319.5	319.5	639.0	-319.5	-319.5	-639.0
Int5	425.9	425.9	851.8	-425.9	-425.9	-851.8
Int6	425.9	425.9	851.8	-425.9	-425.9	-851.8
Int7	425.9	425.9	851.8	-425.9	-425.9	-851.8
Int8	425.9	425.9	851.8	-425.9	-425.9	-851.8
Int9	425.9	425.9	851.8	-425.9	-425.9	-851.8
Int10	401.0	401.0	802.0	-401.0	-401.0	-802.0
E2	207.1	207.1	414.2	-207.1	-207.1	-414.2
Total	4284.8	4284.8	8569.6	-4284.8	-4284.8	-8569.6

LESTER BUILDINGS	FDA2 BUILDING LOADS	Job: 637515
		Page: 4 of 4
	Dealer: Prehn Building Systems Inc.	By: kfl
	Owner: Service Master	Date: 10/6/2026

BUILDING LOADS FOR FLEXIBLE DIAPHRAGM ANALYSIS 2 (Continued)

Wind Parallel to Ridge -

Frame	Positive Direction (Windward Wall = E1) Windward Load (lb)	Leeward Load (lb)	Total Load (lb)	Negative Direction (Windward Wall = E2) Windward Load (lb)	Leeward Load (lb)	Total Load (lb)
S2	159.0	340.1	499.1	-159.0	-340.1	-499.1
Int6	371.9	795.4	1167.3	-371.9	-795.4	-1167.3
Int5	443.5	948.6	1392.1	-443.5	-948.6	-1392.1
Int4	545.6	1166.8	1712.4	-545.6	-1166.8	-1712.4
Int3	545.6	1166.8	1712.4	-545.6	-1166.8	-1712.4
Int2	443.5	948.6	1392.1	-443.5	-948.6	-1392.1
Int1	371.9	795.4	1167.3	-371.9	-795.4	-1167.3
S1	159.0	340.1	499.1	-159.0	-340.1	-499.1
Total	3040.0	6501.8	9541.8	-3040.0	-6501.8	-9541.8

LESTER BUILDINGS	FLEXIBLE DIAPHRAGM ANALYSIS	Job: 637515
		Page: 1 of 34
	Dealer: Prehn Building Systems Inc.	By: kfl
	Owner: Service Master	Date: 10/6/2026

FLEXIBLE DIAPHRAGM ANALYSIS (FDA2) SUMMARY - Wind PERPENDICULAR to Ridge

END WALL REACTIONS		ROOF	CEILING
E1: 18.7 lb			
E2: 3461.1 lb	MAXIMUM CHORD TENSION FORCE (lb)	342.1	96.5
MAXIMUM DEFLECTION	MAXIMUM DIAPHRAGM FORCE (lb)	2376.5	670.4
Max. Eave Defl.: 0.329 in			

INPUT INFORMATION

Building Width: 64'-0" Building Length: 80'-1 1/2"

Frame	Frame Total Stiffness (lb/in)	SideWall S1 Stiffness (lb/in)	SideWall S2 Stiffness (lb/in)	Truss Axial Stiff.(EA) (10^6 lb)	Frame Load (Pos.) (lb)	Frame Load (Neg.) (lb)
F1 (E1)	56.6	138.4	138.4	15	375.8	-375.8
F2	143.2	161.2	161.2	15	748.6	-748.6
F3	209.6	648.2	648.2	15	745.4	-745.4
F4 (EP1)	21314.5	2614	2614	15	585.6	-585.6
F5	85	4123.3	4123.3	15	639	-639
F6	85	2920.7	2920.7	15	851.8	-851.8
F7	26.8	0	0	15	851.8	-851.8
F8	140.5	5326	5326	15	851.8	-851.8
F9	38.1	859	859	15	851.8	-851.8
F10	49.4	1889.9	1889.9	15	851.8	-851.8
F11	105.1	3135.5	5175.7	15	802	-802
F12 (E2)	33674	429.5	2426.8	15	414.2	-414.2
Total Frame Load:					8569.6	-8569.6

Bay No.	Bay Length	S1 Chord Axial Stiffness (EA) (10^6 lb)	S2 Chord Axial Stiffness (EA) (10^6 lb)	Diaphragm Stiffness * (lb/in)
1	7'-0 3/4"	7	7	60715
2	7'-0"	7	5	61257.1
3	7'-0"	7	5	61257.1
4	4'-0"	7	5	137440
5	8'-0"	7	7	68720
6	8'-0"	5	7	68720
7	8'-0"	5	7	68720
8	8'-0"	5	7	68720
9	8'-0"	5	7	68720
10	8'-0"	5	7	68720
11	7'-0 3/4"	7	7	77842.1

* Stiffness calculated for building width, individual bay stiffness is used in FDA2.

LESTER BUILDINGS	FLEXIBLE DIAPHRAGM ANALYSIS	Job: 637515
		Page: 2 of 34
	Dealer: Prehn Building Systems Inc.	By: kfl
	Owner: Service Master	Date: 10/6/2026

Building Plan

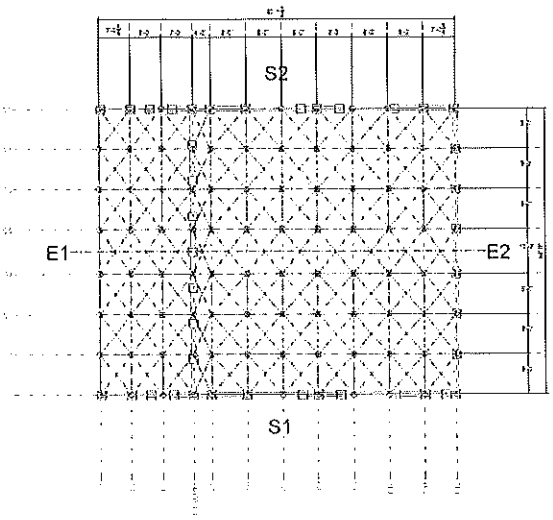

FDA2 RESULTS - Wind PERPENDICULAR to Ridge - Positive Wind Direction

Frame	Frame Total React. (lb)	External Spring React. (lb)	Frame Net React. (lb)	Diaphragm Propping Force (lb)	S1 X-React. (lb)	S2 X-React. (lb)	Truss Axial Force (lb)
F1 (E1)	18.7	0	18.7	357.1	-3.3	3.5	-178.5
F2	45.4	0	45.4	703.2	-3.8	3.9	-389.5
F3	59.7	0	59.7	685.7	-15	14.5	-468
F4 (EP1)	4843.7	0	4843.7	0	-55	46.9	0
F5	21.4	0	21.4	617.6	-81.6	65.1	-518.1
F6	25.4	0	25.4	826.4	-63.3	41.7	-503.6
F7	8.7	0	8.7	843.1	0	0	-415.2
F8	45.4	0	45.4	806.4	-155.9	124.1	-383.7
F9	11.4	0	11.4	840.4	-30.4	26.3	-473.2
F10	12.4	0	12.4	839.4	-78.1	66.1	-568.5
F11	19.1	0	19.1	782.9	-145.8	183.8	-648.6
F12 (E2)	3458.2	0	3458.2	0	-21.5	83.7	-273.3
Total:	8569.5	0	8569.5	7302.2	-653.7	659.6	

Frame	Frame Y-Disp. (in)	S1 X-Disp. (in)	S2 X-Disp. (in)
F1 (E1)	0.329	-0.024	0.025
F2	0.314	-0.024	0.024
F3	0.28	-0.023	0.022
F4 (EP1)	0.227	-0.021	0.018
F5	0.249	-0.02	0.016
F6	0.296	-0.022	0.014
F7	0.321	-0.026	0.017
F8	0.32	-0.029	0.023
F9	0.297	-0.035	0.031
F10	0.249	-0.041	0.035
F11	0.178	-0.047	0.036
F12 (E2)	0.103	-0.05	0.034

LESTER BUILDINGS	FLEXIBLE DIAPHRAGM ANALYSIS	Job: 637515
		Page: 3 of 34
	Dealer: Prehn Building Systems Inc.	By: kfl
	Owner: Service Master	Date: 10/6/2026

FLEXIBLE DIAPHRAGM ANALYSIS (FDA2) RESULTS (Continued)

Bay No.	Total Diaph. Force (lb)	Total S1 Chord Force (lb)	Total S2 Chord Force (lb)	Roof Diaph. Force (lb)	Ceiling Diaph. Force (lb)	Roof Chord Tension (lb)	Ceiling Chord Tension (lb)
1	77.2	-3.3	-44.2	357.2	0	0	0
2	213.1	27.5	-171.1	1060.2	0	27.5	0
3	339.6	125.3	-365.1	1746.1	0	125.3	0
4	449.3	131	-318.2	1959.5	552.8	102.2	28.8
5	425.5	-136.9	-108.4	1477.7	416.9	0	0
6	246.3	-280.7	164.1	833.2	235	128	36.1
7	63.2	-274.8	305.3	165.4	46.7	238.1	67.2
8	137.1	-448	380.3	453.4	127.9	296.6	83.7
9	309.5	-430.9	227	1109	312.8	177.1	49.9
10	496.5	-376.9	28.7	1763.7	497.5	22.4	6.3
11	620.1	-293	-83.7	2374.2	669.8	0	0

FDA2 RESULTS - Wind PERPENDICULAR to Ridge - Negative Wind Direction

Frame	Frame Total React. (lb)	External Spring React. (lb)	Frame Net React. (lb)	Diaphragm Propping Force (lb)	S1 X-React. (lb)	S2 X-React. (lb)	Truss Axial Force (lb)
F1 (E1)	-18.7	0	-18.7	-357.1	4.1	-2.5	-178.5
F2	-45.2	0	-45.2	-703.4	4.7	-2.9	-396.3
F3	-58.4	0	-58.4	-687	17.5	-11.6	-500.2
F4 (EP1)	-4842.8	0	-4842.8	0	58.9	-41.3	0
F5	-21.4	0	-21.4	-617.6	84.1	-59.8	-523.7
F6	-25.4	0	-25.4	-826.4	56.1	-47	-508
F7	-8.6	0	-8.6	-843.2	0	0	-416.3
F8	-45.4	0	-45.4	-806.4	156.3	-121.5	-383.2
F9	-11.4	0	-11.4	-840.4	32.4	-24.1	-476
F10	-12.5	0	-12.5	-839.3	82.1	-62.2	-574.2
F11	-18.9	0	-18.9	-783.1	143.4	-190.4	-661.9
F12 (E2)	-3461.1	0	-3461.1	0	19.5	-96.1	-288
Total:	-8569.8	0	-8569.8	-7303.9	659.1	-659.4	

Frame	Frame Y-Disp. (in)	S1 X-Disp. (in)	S2 X-Disp. (in)
F1 (E1)	-0.329	0.03	-0.018
F2	-0.314	0.029	-0.018
F3	-0.28	0.027	-0.018
F4 (EP1)	-0.227	0.023	-0.016
F5	-0.249	0.02	-0.015
F6	-0.296	0.019	-0.016
F7	-0.32	0.023	-0.019
F8	-0.32	0.029	-0.023
F9	-0.297	0.038	-0.028
F10	-0.249	0.043	-0.033
F11	-0.178	0.046	-0.037
F12 (E2)	-0.103	0.046	-0.04

Bay No.	Total Diaph. Force (lb)	Total S1 Chord Force (lb)	Total S2 Chord Force (lb)	Roof Diaph. Force (lb)	Ceiling Diaph. Force (lb)	Roof Chord Tension (lb)	Ceiling Chord Tension (lb)
1	84.1	-47.8	-2.5	357.1	0	0	0
2	221.4	-179.1	25	1060.4	0	25	0
3	342.3	-371.7	120.8	1747.6	0	120.8	0
4	448.6	-312.8	135.4	1957.4	552.2	105.6	29.8

LESTER BUILDINGS	FLEXIBLE DIAPHRAGM ANALYSIS	Job: 637515
		Page: 4 of 34
	Dealer: Prehn Building Systems Inc.	By: kfl
	Owner: Service Master	Date: 10/6/2026

FLEXIBLE DIAPHRAGM ANALYSIS (FDA2) RESULTS (Continued)

Bay No.	Total Diaph. Force (lb)	Total S1 Chord Force (lb)	Total S2 Chord Force (lb)	Roof Diaph. Force (lb)	Ceiling Diaph. Force (lb)	Roof Chord Tension (lb)	Ceiling Chord Tension (lb)
5	424.5	-87.1	-115.7	1475.8	416.3	0	0
6	245.1	195	-247.2	831.2	234.5	152.1	42.9
7	61.5	333.3	-242.7	162.2	45.7	260	73.3
8	138.2	438.6	-381.7	455.5	128.5	342.1	96.5
9	309.4	295	-356.4	1111	313.4	230.1	64.9
10	496.4	120.7	-280.8	1765.7	498.1	94.1	26.6
11	620.8	-19.5	-231.1	2376.5	670.4	0	0

LESTER BUILDINGS	FLEXIBLE DIAPHRAGM ANALYSIS	Job: 637515
		Page: 5 of 34
	Dealer: Prehn Building Systems Inc.	By: kfl
	Owner: Service Master	Date: 10/6/2026

FLEXIBLE DIAPHRAGM ANALYSIS (FDA2) SUMMARY - Wind PARALLEL to Ridge

SIDE WALL REACTIONS		ROOF	CEILING
S1: 4501.8 lb			
S2: 4638.7 lb	MAXIMUM CHORD TENSION FORCE (lb)	732.3	180.9
MAXIMUM DEFLECTION	MAXIMUM DIAPHRAGM FORCE (lb)	3684.3	455.4
Max. Eave Defl.: 0.504 in			

INPUT INFORMATION

Building Width: 64'-0" Building Length: 80'-1 1/2"

Frame	Frame Total Stiffness (lb/in)	EndWall E1 Stiffness (lb/in)	EndWall E2 Stiffness (lb/in)	Truss Axial Stiff.(EA) (10^6 lb)	Frame Load (Pos.) (lb)	Frame Load (Neg.) (lb)
G1 (S1)	22245.7	28.3	3092.5	21	499.1	-499.1
G2	150.8	0	5497.8	21	1167.3	-1167.3
G3	159.3	0	3436.1	21	1392.1	-1392.1
G4	160.7	0	4810.6	21	1712.4	-1712.4
G5	160.7	0	4810.6	21	1712.4	-1712.4
G6	159.3	0	3436.1	21	1392.1	-1392.1
G7	150.8	0	5497.8	21	1167.3	-1167.3
G8 (S2)	26283.2	28.3	3092.5	21	499.1	-499.1
Total Frame Load:					9541.8	-9541.8

Bay No.	Bay Length	E1 Chord Axial Stiffness (EA) (10^6 lb)	E2 Chord Axial Stiffness (EA) (10^6 lb)	Diaphragm Stiffness * (lb/in)
1	9'-0"	15	15	59648.6
2	9'-0"	15	15	59648.6
3	9'-0"	15	15	59648.6
4	10'-0"	15	15	53683.8
5	9'-0"	15	15	59648.6
6	9'-0"	15	15	59648.6
7	9'-0"	15	15	59648.6

* Stiffness calculated for building length, individual bay stiffness is used in FDA2.

LESTER BUILDINGS	FLEXIBLE DIAPHRAGM ANALYSIS	Job: 637515
		Page: 6 of 34
	Dealer: Prehn Building Systems Inc.	By: kfi
	Owner: Service Master	Date: 10/6/2026

Building Plan

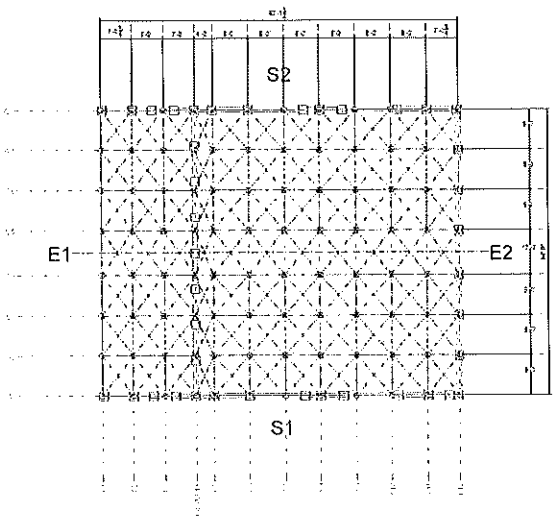

FDA2 RESULTS - Wind PARALLEL to Ridge - Positive Wind Direction

Frame	Frame Total React. (lb)	External Spring React. (lb)	Frame Net React. (lb)	Diaphragm Propping Force (lb)	E1 Y-React. (lb)	E2 Y-React. (lb)	BCB Axial Force (lb)
G1 (S1)	4501.8	0	4501.8	0	0.1	-25.4	-757.2
G2	52.4	0	52.4	1114.9	0	-46.2	-613
G3	71.9	0	71.9	1320.2	0	-20.2	-624.1
G4	81.5	0	81.5	1630.9	0	-5.7	-624.1
G5	81.1	0	81.1	1631.3	0	26	-642.7
G6	70.4	0	70.4	1321.7	0	34.4	-642.7
G7	49.7	0	49.7	1117.6	0	68.8	-630.9
G8 (S2)	4632.6	0	4632.6	0	-0.7	37.9	-767
Total:	9541.4	0	9541.4	8136.6	-0.6	69.6	

Frame	Frame X-Disp. (in)	E1 Y-Disp. (in)	E2 Y-Disp. (in)
G1 (S1)	0.205	0.004	-0.008
G2	0.347	0.002	-0.008
G3	0.45	-0.002	-0.006
G4	0.504	-0.007	-0.001
G5	0.501	-0.012	0.005
G6	0.44	-0.017	0.01
G7	0.33	-0.021	0.013
G8 (S2)	0.18	-0.023	0.012

Bay No.	Total Diaph. Force (lb)	Total E1 Chord Force (lb)	Total E2 Chord Force (lb)	Roof Diaph. Force (lb)	Ceiling Diaph. Force (lb)	Roof Chord Tension (lb)	Ceiling Chord Tension (lb)
1	735.1	-323.4	-37.9	3678.8	454.7	0	0
2	545.4	-552.1	345.4	2684.3	331.8	269.4	76
3	317.7	-667.8	642.8	1508	186.4	501.4	141.4
4	29.4	-660.5	822.2	51.4	6.4	641.3	180.9
5	300.1	-667.1	653.3	1395.2	172.5	509.6	143.7

LESTER BUILDINGS	FLEXIBLE DIAPHRAGM ANALYSIS	Job: 637515
		Page: 7 of 34
	Dealer: Prehn Building Systems Inc.	By: kfl
	Owner: Service Master	Date: 10/6/2026

FLEXIBLE DIAPHRAGM ANALYSIS (FDA2) RESULTS (Continued)

Bay No.	Total Diaph. Force (lb)	Total E1 Chord Force (lb)	Total E2 Chord Force (lb)	Roof Diaph. Force (lb)	Ceiling Diaph. Force (lb)	Roof Chord Tension (lb)	Ceiling Chord Tension (lb)
6	523.1	-553.8	348.7	2570	317.7	272	76.7
7	706.9	-328.2	-25.4	3562.4	440.4	0	0

FDA2 RESULTS - Wind PARALLEL to Ridge - Negative Wind Direction

Frame	Frame Total React. (lb)	External Spring React. (lb)	Frame Net React. (lb)	Diaphragm Propping Force (lb)	E1 Y-React. (lb)	E2 Y-React. (lb)	BCB Axial Force (lb)
G1 (S1)	-4497.1	0	-4497.1	0	0.1	40.7	689.4
G2	-52.7	0	-52.7	-1114.6	0	57.1	-522.7
G3	-71.7	0	-71.7	-1320.4	0	20.6	-441.4
G4	-81	0	-81	-1631.4	0	3.5	547.7
G5	-80.5	0	-80.5	-1631.9	0	-24	547.7
G6	-70.1	0	-70.1	-1322	0	-35.6	-457
G7	-49.9	0	-49.9	-1117.4	0	-81.9	-550
G8 (S2)	-4638.7	0	-4638.7	0	0.6	-55.2	692.8
Total:	-9541.7	0	-9541.7	-8137.7	0.7	-74.8	

Frame	Frame X-Disp. (in)	E1 Y-Disp. (in)	E2 Y-Disp. (in)
G1 (S1)	-0.204	0.002	0.013
G2	-0.346	0.002	0.01
G3	-0.449	0.004	0.006
G4	-0.504	0.009	0.001
G5	-0.501	0.014	-0.005
G6	-0.438	0.019	-0.01
G7	-0.328	0.021	-0.015
G8 (S2)	-0.179	0.021	-0.018

Bay No.	Total Diaph. Force (lb)	Total E1 Chord Force (lb)	Total E2 Chord Force (lb)	Roof Diaph. Force (lb)	Ceiling Diaph. Force (lb)	Roof Chord Tension (lb)	Ceiling Chord Tension (lb)
1	736.6	-0.6	-411.5	3684.3	455.4	0	0
2	538.1	319.5	-630.9	2689.9	332.5	319.5	0
3	307.4	574.9	-746.6	1513.2	187.1	574.9	0
4	28.8	732.3	-714.3	53.5	6.6	732.3	0
5	275.2	589.6	-729.7	1391.1	171.9	589.6	0
6	506.6	332.2	-611.9	2566.1	317.2	332.2	0
7	700.3	0.1	-383.8	3558.1	439.8	0.1	0

LESTER BUILDINGS	SURFACE DIAPHRAGM ANALYSIS	Job: 637515
		Page: 8 of 34
	Dealer: Prehn Building Systems Inc.	By: kfl
	Owner: Service Master	Date: 10/6/2026

SURFACE DIAPHRAGM ANALYSIS - BUILDING INPUTS

Building Inputs

Building Line: Uni-Frame Embedded
Width x Length x Eave Height: 64'-0" x 80'-1 1/2" x 18'-11"
Roof Slope: 3/12 Curb Height: 0'-0"
Dead Loads: Roof: 4 psf Ceiling: 10 psf Wall: 5.5 psf

Total Wind Load PERPENDICULAR to Ridge: 8571.7 lb at Elevation = 22'-8"
Total Wind Load PARALLEL to Ridge: 9543.8 lb at Elevation = 22'-8"

Shear Wall Surface Inputs

Surface .SubRegion	Type	Length	Height	Effective Length	Allowable Shear (lb/ft)	Unit Stiffness (lb/in)
E1	EndWall	64'-0"	18'-11"	0'-3 1/2"	156	6700
E2	EndWall	64'-0"	18'-11"	49'-0"	302.7	13000
EP1	IntPartition	64'-0"	18'-11"	64'-0"	190	6300
S1	SideWall	80'-1 1/2"	18'-11"	35'-4 3/8"	--	--
S1.1	--	21'-0 3/4"	--	9'-8 1/2"	156	6700
S1.2	--	59'-0 3/4"	--	31'-0 3/4"	302.7	13000
S2	SideWall	80'-1 1/2"	18'-11"	41'-2 7/8"	--	--
S2.1	--	59'-0 3/4"	--	35'-0 3/4"	302.7	13000
S2.2	--	21'-0 3/4"	--	9'-8 1/2"	156	6700

Shear Wall Surface Inputs - Openings

Surface	Opening	Width	Height	Location	Base Elev.	Act. Open. Length	Eff. Open. Length
E1	D13	62'-10"	17'-8"	0'-7"	0'-0"	64'-0"	63'-8 1/2"
E2	D3	5'-0"	4'-0"	12'-6"	12'-6"		
E2	D2	5'-0"	4'-0"	29'-6"	12'-6"		
E2	D1	5'-0"	4'-0"	46'-6"	12'-6"	15'-0"	15'-0"
S1	D8	4'-0"	14'-0"	1'-6 3/4"	3'-0"		
S1	D7	3'-4 1/4"	6'-9 1/8"	7'-4 5/8"	0'-0"		
S1	D6	4'-0"	14'-0"	12'-0 3/4"	3'-0"		
S1	D14	12'-0"	14'-0"	33'-3 3/4"	0'-0"		
S1	D15	12'-0"	14'-0"	54'-3 3/4"	0'-0"		
S1	D9	4'-0"	4'-0"	73'-7 1/2"	13'-0"	39'-4 1/4"	44'-9 1/8"
S2	D16	12'-0"	14'-0"	13'-9 3/4"	0'-0"		
S2	D17	12'-0"	14'-0"	34'-9 3/4"	0'-0"		
S2	D12	4'-0"	4'-0"	64'-0 3/4"	13'-0"		
S2	D10	3'-4 1/4"	6'-9 1/8"	69'-4 5/8"	0'-0"		
S2	D11	4'-0"	4'-0"	74'-6 3/4"	13'-0"	35'-4 1/4"	38'-10 5/8"

Horizontal Surface Inputs

Surface .SubRegion	Type	Length	Width	Allowable Shear (lb/ft)	Unit Stiffness (lb/in)
C1	Ceiling	80'-1 1/2"	64'-0"	--	--
C1.1	--	21'-0"	--	0	0
C1.2	--	59'-1 1/2"	--	72	6300
R1	Roof	80'-1 1/2"	64'-0"	194	6700

Ceiling Diaphragm Stiffness Reduction Factor = 0.3 (Applied to Tabulated Stiffnesses)

LESTER BUILDINGS	SURFACE DIAPHRAGM ANALYSIS	Job: 637515
		Page: 9 of 34
	Dealer: Prehn Building Systems Inc.	By: kfl
	Owner: Service Master	Date: 10/6/2026

SURFACE DIAPHRAGM ANALYSIS SUMMARY - Wind PERPENDICULAR to Ridge

Diaphragm Analysis Results

Critical Surface:	EP1	Shear	(lb/ft)	(lb)
Effective Length:	64'-0"	Applied:	75.7	4843.7
Diaph. Stress Index (DSI):	0.4	Allowable:	190	12160

Total Wind Load PERPENDICULAR to Ridge: 8571.7 lb at Elevation = 22'-8"

Building Plan - POSITIVE Wind Load PERPENDICULAR to Building Ridge

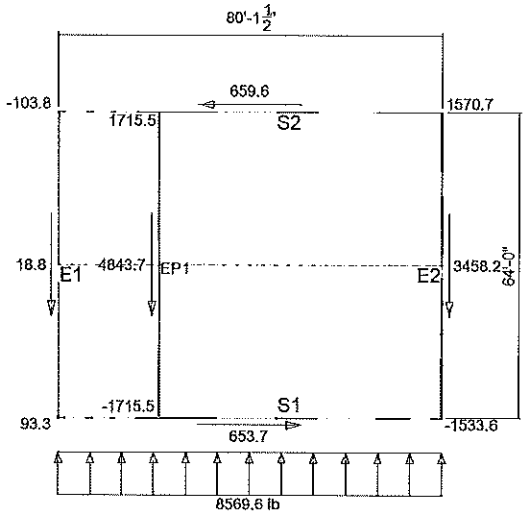

SURFACE DIAPHRAGM ANALYSIS (SDA) RESULTS

Surface	Effective Length (ft)	Applied Shear (lb)	Shear Capacity (lb)	Applied Shear (plf)	Shear Capacity (plf)	DSI	
E1	0.29	18.8	0	0	156	0	OK
E2	49	3458.2	14832.3	70.6	302.7	0.23	OK
EP1	64	4843.7	12160	75.7	190	0.4	OK
S1.1	21.06	38.4	1513.7	7.7	156	0.05	OK
S1.2	59.06	223.9	9402.6	30.6	302.7	0.2	OK
S2.1	59.06	333.6	10613.4	24.2	302.7	0.08	OK
S2.2	21.06	34.1	1513.7	6.8	156	0.02	OK
C1.1	21	0	0	0	0	-1	OK
C1.2	59.12	669.7	4608	10.5	72	0.15	OK
R1	64	2374.4	12416	37.1	194	0.19	OK

Applied Shear Forces obtained from Flexible Diaphragm Analysis.

LESTER BUILDINGS	SURFACE DIAPHRAGM ANALYSIS	Job: 637515
		Page: 10 of 34
	Dealer: Prehn Building Systems Inc.	By: kfl
	Owner: Service Master	Date: 10/6/2026

Roof Horizontal Diaphragm - POSITIVE Wind Load PERPENDICULAR to Building Ridge

-

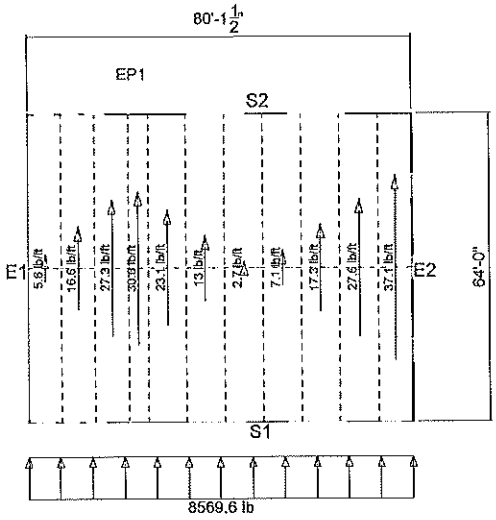

Ceiling Horizontal Diaphragm - POSITIVE Wind Load PERPENDICULAR to Building Ridge

-

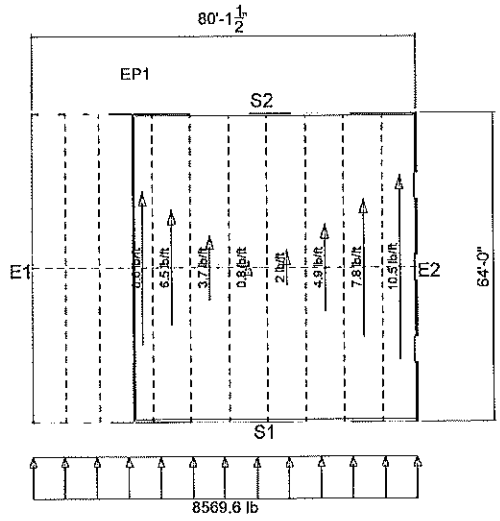

LESTER BUILDINGS	SURFACE DIAPHRAGM ANALYSIS	Job: 637515
		Page: 11 of 34
	Dealer: Prehn Building Systems Inc.	By: kfl
	Owner: Service Master	Date: 10/6/2026

Surface E1- Overturning Analysis for POSITIVE Wind PERPENDICULAR to Building Ridge

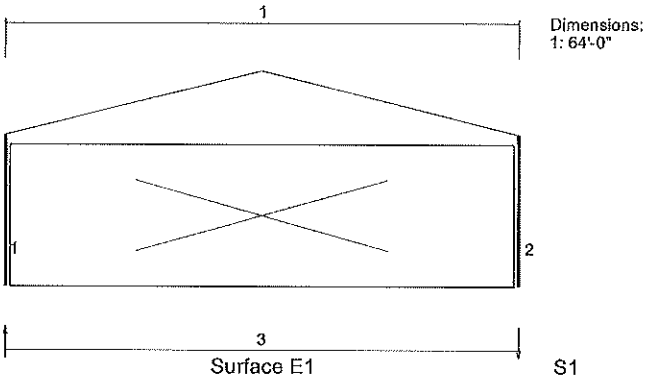

Applied Shear and Overturning Moment

Shear = -18.8 lb at Elev. = 22.67 ft OT Moment = -426.1 ft-lb

Shear Region	Height (ft)	Width (ft)	Capacity Factor	Shear (lb)	Moment * (ft-lb)
1	18.92	0	1	-9.4	-171.9
2	18.92	0	1	-9.4	-171.9
Total				-18.8	-426.1

Maximum Shear (plf):

* OT Moment is 75% of Shear x Ht (25% assumed resisted at top)

Overturning Resistance

Couple	Arm (ft)	Force L / R (lb)	Moment (ft-lb)
1 to	0	0 / 0	-171.9
2	0	0 / 0	-171.9
3	64	1.3 / -1.3	-82.2
Total			-426.1

Sign Convention: + = Compression, - = Uplift

Left Corner Force = 1 + 3 = 1.3 lb

Right Corner Force = 2 + 3 = -1.3 lb

Surface E2- Overturning Analysis for POSITIVE Wind PERPENDICULAR to Building Ridge

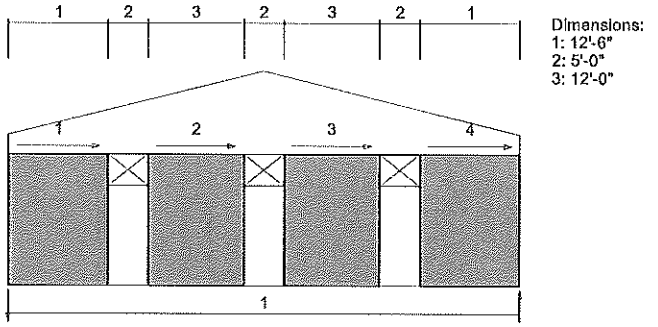

Applied Shear and Overturning Moment

Shear = 3458.2 lb at Elev. = 22.67 ft OT Moment = 78385.9 ft-lb

Shear Region	Height (ft)	Width (ft)	Capacity Factor	Shear (lb)	Moment * (ft-lb)
1	16.5	12.5	1	882.2	10917.2
2 to	16.5	12	1	846.9	10480.4
3	16.5	12	1	846.9	10480.4
4	16.5	12.5	1	882.2	10917.2
Total				3458.2	78385.9

Maximum Shear (plf): 70.6 = 882.2 / 12.5

* OT Moment is 75% of Shear x Ht (25% assumed resisted at top)

Overturning Resistance

Couple	Arm (ft)	Force L / R (lb)	Moment (ft-lb)
1	64	-1224.8 / 1224.8	78385.9
Total			78385.9

Sign Convention: + = Compression, - = Uplift

Left Corner Force = 1 = -1224.8 lb

Right Corner Force = 1 = 1224.8 lb

LESTER BUILDINGS	SURFACE DIAPHRAGM ANALYSIS	Job: 637515
		Page: 12 of 34
	Dealer: Prehn Building Systems Inc.	By: kfl
	Owner: Service Master	Date: 10/6/2026

Surface EP1- Overturning Analysis for POSITIVE Wind PERPENDICULAR to Building Ridge

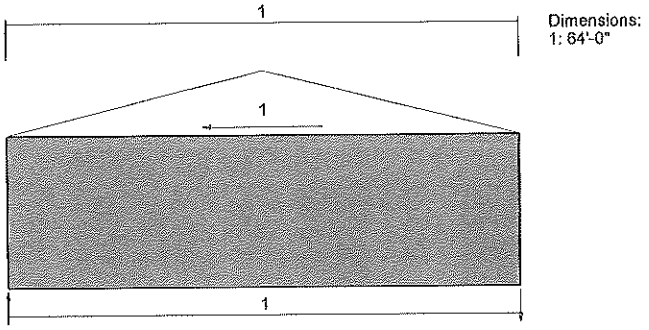

S2 Surface EP1 S1

Applied Shear and Overturning Moment

Shear = -4843.7 lb at Elev. = 22.67 ft OT Moment = -109790.5 ft-lb

Shear Region	Height (ft)	Width (ft)	Capacity Factor	Shear (lb)	Moment * (ft-lb)
1	18.92	64	1	-4843.7	-68720
Total				-4843.7	-109790.5

Maximum Shear (plf): 75.7 = 4843.7 / 64

* OT Moment is 75% of Shear x Ht (25% assumed resisted at top)

Overturning Resistance

Couple	Arm (ft)	Force L / R (lb)	Moment (ft-lb)
1	64	1715.5 / -1715.5	-109790.5
Total			-109790.5

Sign Convention: + = Compression, - = Uplift

Left Corner Force = 1 = 1715.5 lb

Right Corner Force = 1 = -1715.5 lb

Surface S1- Overturning Analysis for POSITIVE Wind PERPENDICULAR to Building Ridge

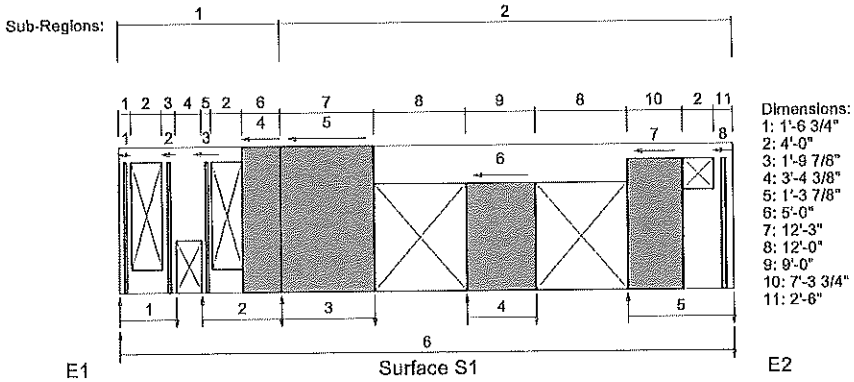

E1 Surface S1 E2

Applied Shear and Overturning Moment

Shear = -653.7 lb at Elev. = 22.67 ft OT Moment = -14817.2 ft-lb

Shear Region	Height (ft)	Width (ft)	Capacity Factor	Shear (lb)	Moment * (ft-lb)
1	17	1.56	0.25	-3.3	-42.1
2	17	1.82	0.25	-3.8	-48.4
3	17	1.32	0.25	-2.7	-34.4
4	18.92	5	1	-38.4	-544.8
5	18.92	12.25	1	-173.8	-2465.8
6	14	9	1	-186.3	-1956.2
7	17	7.31	1	-223.9	-2854.7
8	17	2.5	0.25	-21.5	-274.1
Total				-653.7	-14817.2

Maximum Shear (plf): 30.6 = 223.9 / 7.31

* OT Moment is 75% of Shear x Ht (25% assumed resisted at top)

Overturning Resistance

Couple	Arm (ft)	Force L / R (lb)	Moment (ft-lb)
1	7.38	12.3 / -12.3	-90.5
2	10.32	56.1 / -56.1	-579.2
3	12.25	201.3 / -201.3	-2465.8
4	9	217.4 / -217.4	-1956.2
5	13.81	226.5 / -226.5	-3128.8
6	80.12	82.3 / -82.3	-6596.7
Total			-14817.2

Sign Convention: + = Compression, - = Uplift

Left Corner Force = 1 + 6 = 94.6 lb

Right Corner Force = 5 + 6 = -308.8 lb

LESTER BUILDINGS	SURFACE DIAPHRAGM ANALYSIS	Job: 637515
		Page: 13 of 34
	Dealer: Prehn Building Systems Inc.	By: kfl
	Owner: Service Master	Date: 10/6/2026

Surface S2- Overturning Analysis for POSITIVE Wind PERPENDICULAR to Building Ridge

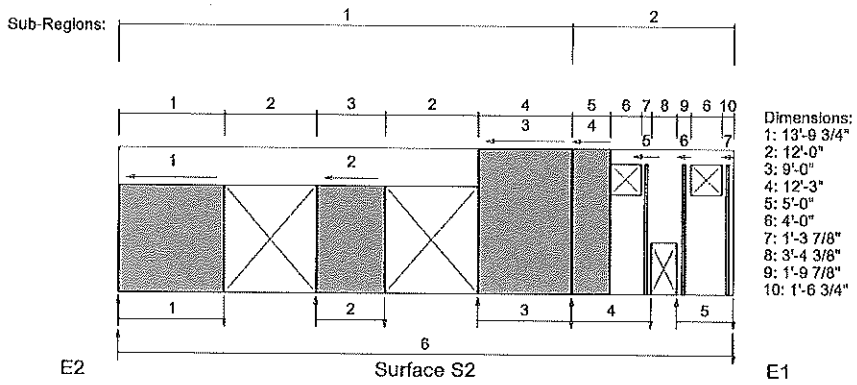

Applied Shear and Overturning Moment

Shear = -659.6 lb at Elev. = 22.67 ft OT Moment = -14950.9 ft-lb

Shear Region	Height (ft)	Width (ft)	Capacity Factor	Shear (lb)	Moment * (ft-lb)
1	14	13.81	1	-333.6	-3502.8
2	14	9	1	-150.4	-1579.2
3	18.92	12.25	1	-131.5	-1865.7
4	18.92	5	1	-34.1	-483.8
5	17	1.32	0.25	-2.6	-33.2
6	17	1.82	0.25	-3.9	-49.7
7	17	1.56	0.25	-3.5	-44.6
Total				-659.6	-14950.9

Maximum Shear (plf): 24.2 = 333.6 / 13.81

* OT Moment is 75% of Shear x Ht (25% assumed resisted at top)

Overturning Resistance

Couple	Arm (ft)	Force L / R (lb)	Moment (ft-lb)
1	13.81	253.6 / -253.6	-3502.8
2	9	175.5 / -175.5	-1579.2
3	12.25	152.3 / -152.3	-1865.7
4	10.32	50.1 / -50.1	-516.9
5	7.38	12.8 / -12.8	-94.4
6	80.12	92.3 / -92.3	-7392
Total			-14950.9

Sign Convention: + = Compression, - = Uplift

Left Corner Force = 1 + 6 = 345.9 lb

Right Corner Force = 5 + 6 = -105.1 lb

LESTER BUILDINGS	SURFACE DIAPHRAGM ANALYSIS	Job: 637515
		Page: 14 of 34
	Dealer: Prehn Building Systems Inc.	By: kfl
	Owner: Service Master	Date: 10/6/2026

Building Plan - NEGATIVE Wind Load PERPENDICULAR to Building Ridge

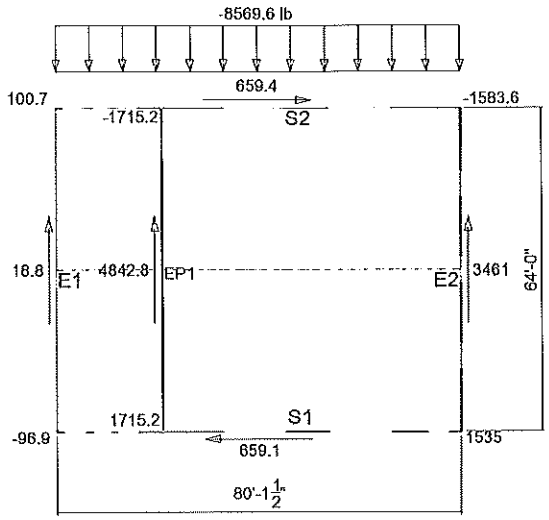

SURFACE DIAPHRAGM ANALYSIS (SDA) RESULTS

Surface	Effective Length (ft)	Applied Shear (lb)	Shear Capacity (lb)	Applied Shear (plf)	Shear Capacity (plf)	DSI	
E1	0.29	18.8	0	0	156	0	OK
E2	49	3461	14832.3	70.6	302.7	0.23	OK
EP1	64	4842.8	12160	75.7	190	0.4	OK
S1.1	21.06	42.2	1513.7	8.4	156	0.05	OK
S1.2	59.06	225.5	9402.6	30.8	302.7	0.2	OK
S2.1	59.06	348.7	10613.4	25.2	302.7	0.08	OK
S2.2	21.06	29.1	1513.7	5.8	156	0.02	OK
C1.1	21	0	0	0	0	-1	OK
C1.2	59.12	670.3	4608	10.5	72	0.15	OK
R1	64	2376.5	12416	37.1	194	0.19	OK

Applied Shear Forces obtained from Flexible Diaphragm Analysis.

LESTER BUILDINGS	SURFACE DIAPHRAGM ANALYSIS	Job: 637515
		Page: 15 of 34
	Dealer: Prehn Building Systems Inc.	By: kfl
	Owner: Service Master	Date: 10/6/2026

Roof Horizontal Diaphragm - NEGATIVE Wind Load PERPENDICULAR to Building Ridge

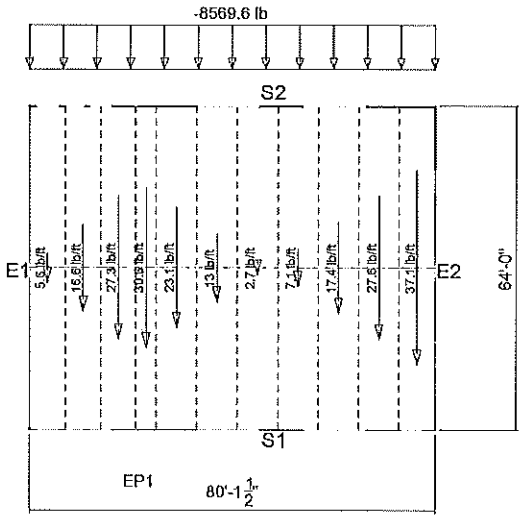

Ceiling Horizontal Diaphragm - NEGATIVE Wind Load PERPENDICULAR to Building Ridge

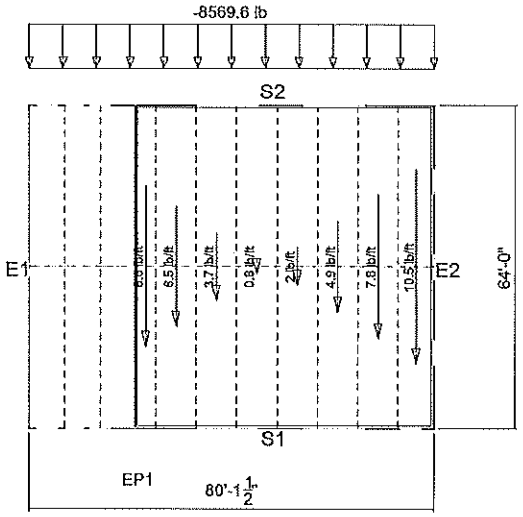

LESTER BUILDINGS	SURFACE DIAPHRAGM ANALYSIS	Job: 637515
		Page: 16 of 34
	Dealer: Prehn Building Systems Inc.	By: kfl
	Owner: Service Master	Date: 10/6/2026

Surface E1- Overturning Analysis for NEGATIVE Wind PERPENDICULAR to Building Ridge

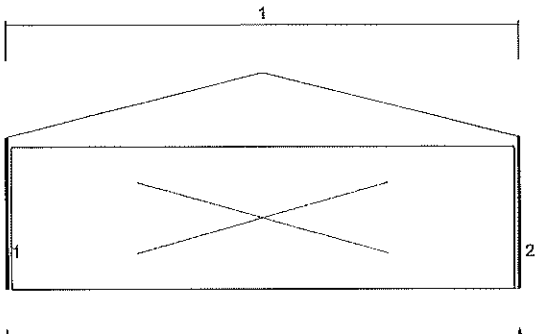

Applied Shear and Overturning Moment

Shear = 18.8 lb at Elev. = 22.67 ft OT Moment = 426.1 ft-lb

Shear Region	Height (ft)	Width (ft)	Capacity Factor	Shear (lb)	Moment * (ft-lb)
1	18.92	0	1	9.4	171.9
2	18.92	0	1	9.4	171.9
Total				18.8	426.1

Maximum Shear (plf):

* OT Moment is 75% of Shear x Ht (25% assumed resisted at top)

Overturning Resistance

Couple	Arm (ft)	Force L / R (lb)	Moment (ft-lb)
1 to	0	0 / 0	171.9
2	0	0 / 0	171.9
3	64	-1.3 / 1.3	82.2
Total			426.1

Sign Convention: + = Compression, - = Uplift

Left Corner Force = 1 + 3 = -1.3 lb

Right Corner Force = 2 + 3 = 1.3 lb

Surface E2- Overturning Analysis for NEGATIVE Wind PERPENDICULAR to Building Ridge

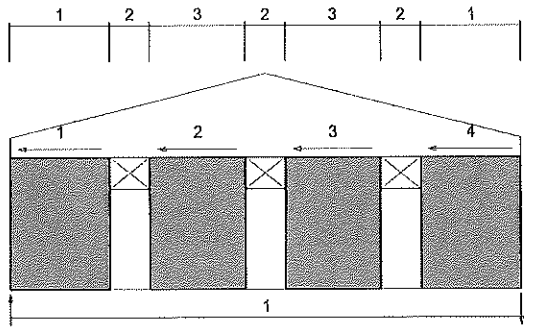

Applied Shear and Overturning Moment

Shear = -3461 lb at Elev. = 22.67 ft OT Moment = -78449.3 ft-lb

Shear Region	Height (ft)	Width (ft)	Capacity Factor	Shear (lb)	Moment * (ft-lb)
1	16.5	12.5	1	-882.9	-10925.9
2 to	16.5	12	1	-847.6	-10489.1
3	16.5	12	1	-847.6	-10489.1
4	16.5	12.5	1	-882.9	-10925.9
Total				-3461	-78449.3

Maximum Shear (plf): 70.6 = 882.9 / 12.5

* OT Moment is 75% of Shear x Ht (25% assumed resisted at top)

Overturning Resistance

Couple	Arm (ft)	Force L / R (lb)	Moment (ft-lb)
1	64	1225.8 / -1225.8	-78449.3
Total			-78449.3

Sign Convention: + = Compression, - = Uplift

Left Corner Force = 1 = 1225.8 lb

Right Corner Force = 1 = -1225.8 lb

LESTER BUILDINGS	SURFACE DIAPHRAGM ANALYSIS	Job: 637515
		Page: 17 of 34
	Dealer: Prehn Building Systems Inc.	By: kfl
	Owner: Service Master	Date: 10/6/2026

Surface EP1- Overturning Analysis for NEGATIVE Wind PERPENDICULAR to Building Ridge

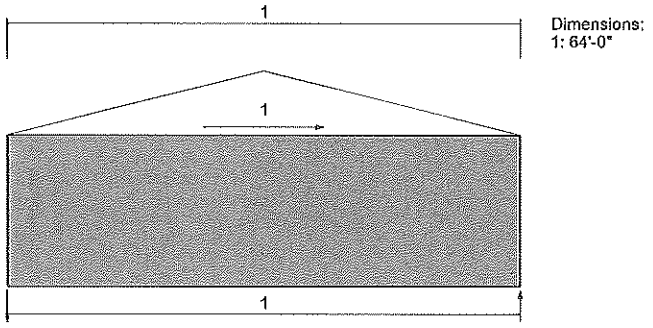

S2 Surface EP1 S1

Applied Shear and Overturning Moment

Shear = 4842.8 lb at Elev. = 22.67 ft OT Moment = 109770.1 ft-lb

Shear Region	Height (ft)	Width (ft)	Capacity Factor	Shear (lb)	Moment * (ft-lb)
1	18.92	64	1	4842.8	68707.2
Total				4842.8	109770.1

Maximum Shear (plf): 75.7 = 4842.8 / 64

* OT Moment is 75% of Shear x Ht (25% assumed resisted at top)

Overturning Resistance

Couple	Arm (ft)	Force L / R (lb)	Moment (ft-lb)
1	64	-1715.2 / 1715.2	109770.1
Total			109770.1

Sign Convention: + = Compression, - = Uplift

Left Corner Force = 1 = -1715.2 lb

Right Corner Force = 1 = 1715.2 lb

Surface S1- Overturning Analysis for NEGATIVE Wind PERPENDICULAR to Building Ridge

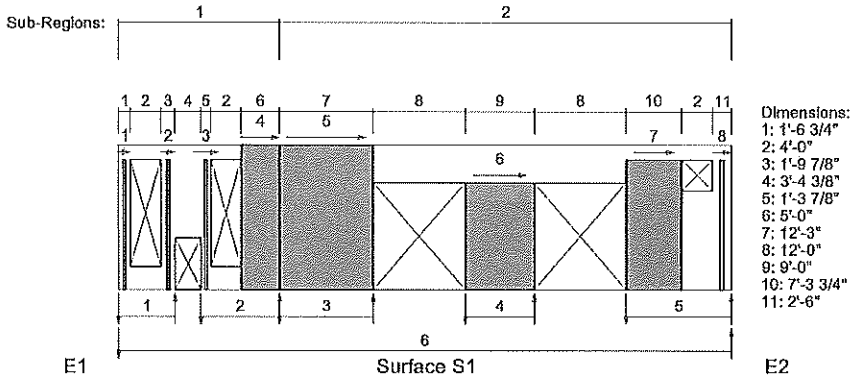

E1 Surface S1 E2

Applied Shear and Overturning Moment

Shear = 659.1 lb at Elev. = 22.67 ft OT Moment = 14939.6 ft-lb

Shear Region	Height (ft)	Width (ft)	Capacity Factor	Shear (lb)	Moment * (ft-lb)
1	17	1.56	0.25	4.1	52.3
2	17	1.82	0.25	4.7	59.9
3	17	1.32	0.25	3.2	40.8
4	18.92	5	1	42.2	598.7
5	18.92	12.25	1	171.2	2428.9
6	14	9	1	188.7	1981.3
7	17	7.31	1	225.5	2875.1
8	17	2.5	0.25	19.5	248.6
Total				659.1	14939.6

Maximum Shear (plf): 30.8 = 225.5 / 7.31

* OT Moment is 75% of Shear x Ht (25% assumed resisted at top)

Overturning Resistance

Couple	Arm (ft)	Force L / R (lb)	Moment (ft-lb)
1	7.38	-15.2 / 15.2	112.2
2	10.32	-62 / 62	639.5
3	12.25	-198.3 / 198.3	2428.9
4	9	-220.2 / 220.2	1981.4
5	13.81	-226.2 / 226.2	3123.8
6	80.12	-83 / 83	6653.9
Total			14939.6

Sign Convention: + = Compression, - = Uplift

Left Corner Force = 1 + 6 = -98.2 lb

Right Corner Force = 5 + 6 = 309.2 lb

LESTER BUILDINGS	SURFACE DIAPHRAGM ANALYSIS	Job: 637515
		Page: 18 of 34
	Dealer: Prehn Building Systems Inc.	By: kfl
	Owner: Service Master	Date: 10/6/2026

Surface S2- Overturning Analysis for NEGATIVE Wind PERPENDICULAR to Building Ridge

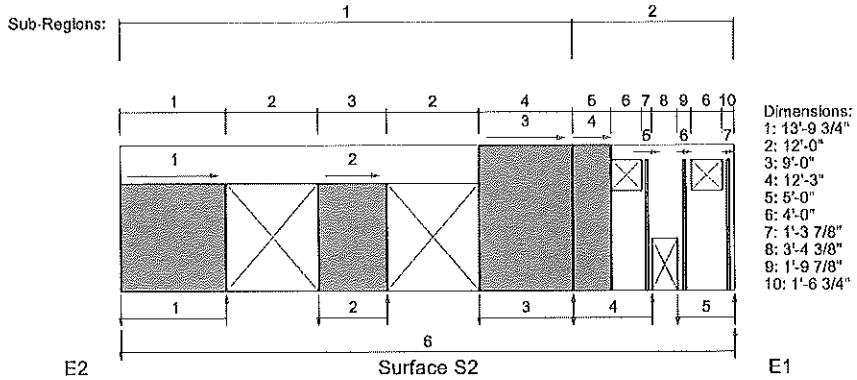

Applied Shear and Overturning Moment

Shear = 659.4 lb at Elev. = 22.67 ft OT Moment = 14946.4 ft-lb

Shear Region	Height (ft)	Width (ft)	Capacity Factor	Shear (lb)	Moment * (ft-lb)
1	14	13.81	1	348.7	3661.4
2	14	9	1	145.6	1528.8
3	18.92	12.25	1	128.5	1823.1
4	18.92	5	1	29.1	412.9
5	17	1.32	0.25	2.1	26.8
6	17	1.82	0.25	2.9	37
7	17	1.56	0.25	2.5	31.9
Total				659.4	14946.4

Maximum Shear (plf): 25.2 = 348.7 / 13.81

* OT Moment is 75% of Shear x Ht (25% assumed resisted at top)

Overturning Resistance

Couple	Arm (ft)	Force L / R (lb)	Moment (ft-lb)
1	13.81	-265.1 / 265.1	3661.4
2	9	-169.9 / 169.9	1528.8
3	12.25	-148.8 / 148.8	1823.1
4	10.32	-42.6 / 42.6	439.6
5	7.38	-9.3 / 9.3	68.9
6	80.12	-92.7 / 92.7	7424.7
Total			14946.4

Sign Convention: + = Compression, - = Uplift

Left Corner Force = 1 + 6 = -357.8 lb

Right Corner Force = 5 + 6 = 102 lb

LESTER BUILDINGS	SURFACE DIAPHRAGM ANALYSIS	Job: 637515
		Page: 19 of 34
	Dealer: Prehn Building Systems Inc.	By: kfl
	Owner: Service Master	Date: 10/6/2026

SURFACE DIAPHRAGM ANALYSIS SUMMARY - Wind PARALLEL to Ridge

Diaphragm Analysis Results

Critical Surface:	S1	Shear	(lb/ft)	(lb)
Effective Length:	35'-4 3/8"	Applied:	139.1	4501.4
Diaph. Stress Index (DSI):	0.89	Allowable:	156	10916.3

Total Wind Load PARALLEL to Ridge: 9543.8 lb at Elevation = 22'-8"

Building Plan - POSITIVE Wind Load PARALLEL to Building Ridge

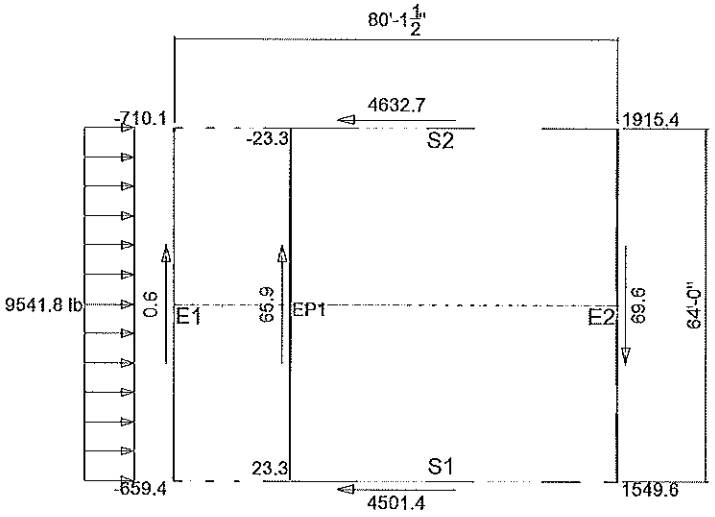

SURFACE DIAPHRAGM ANALYSIS (SDA) RESULTS

Surface	Effective Length (ft)	Applied Shear (lb)	Shear Capacity (lb)	Applied Shear (plf)	Shear Capacity (plf)	DSI	
E1	0.29	0.6	0	0	156	0	OK
E2	49	69.6	14832.3	8.5	302.7	0.04	OK
EP1	64	65.9	12160	1	190	0.01	OK
S1.1	21.06	358.3	1513.7	71.7	156	0.46	OK
S1.2	59.06	1703.5	9402.6	139.1	302.7	0.89	OK
S2.1	59.06	1673.3	10613.4	121.1	302.7	0.4	OK
S2.2	21.06	312.2	1513.7	62.4	156	0.21	OK
C1.1	21	0	0	0	0	-1	OK
C1.2	59.12	736.4	4257	12.5	72	0.17	OK
R1	80.12	4133.5	15544.2	51.6	194	0.27	OK

Applied Shear Forces obtained from Flexible Diaphragm Analysis.

LESTER BUILDINGS	SURFACE DIAPHRAGM ANALYSIS	Job: 637515
		Page: 20 of 34
	Dealer: Prehn Building Systems Inc.	By: kfl
	Owner: Service Master	Date: 10/6/2026

Roof Horizontal Diaphragm - POSITIVE Wind Load PARALLEL to Building Ridge

-

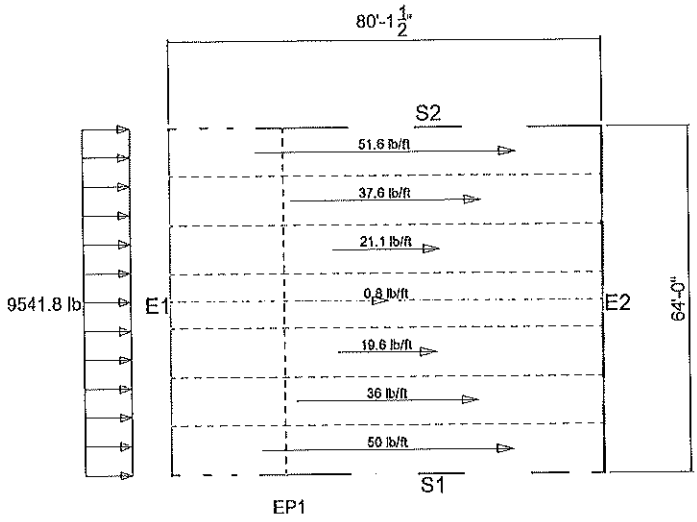

Ceiling Horizontal Diaphragm - POSITIVE Wind Load PARALLEL to Building Ridge

-

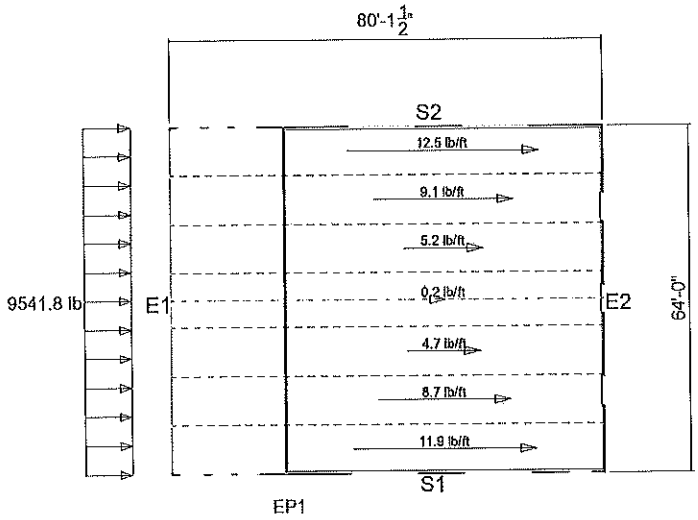

LESTER BUILDINGS	SURFACE DIAPHRAGM ANALYSIS	Job: 637515
		Page: 21 of 34
	Dealer: Prehn Building Systems Inc.	By: kfl
	Owner: Service Master	Date: 10/6/2026

Surface E1- Overturning Analysis for POSITIVE Wind PARALLEL to Building Ridge

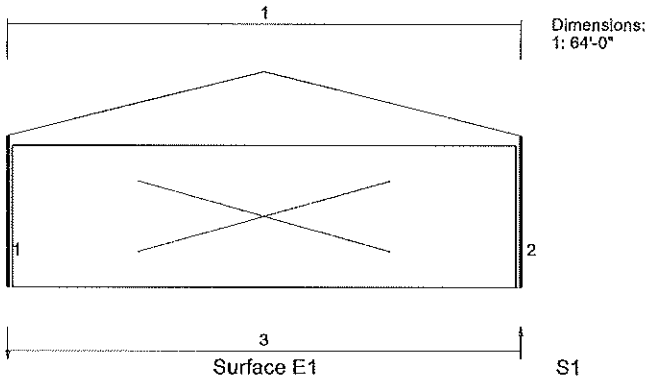

Applied Shear and Overturning Moment

Shear = 0.6 lb at Elev. = 22.67 ft OT Moment = 13.6 ft-lb

Shear Region	Height (ft)	Width (ft)	Capacity Factor	Shear (lb)	Moment * (ft-lb)
1	18.92	0	1	0.7	12.8
2	18.92	0	1	-0.1	-1.8
Total				0.6	13.6

Maximum Shear (plf):

* OT Moment is 75% of Shear x Ht (25% assumed resisted at top)

Overturning Resistance

Couple	Arm (ft)	Force L / R (lb)	Moment (ft-lb)
1	0	0 / 0	12.8
2	0	0 / 0	-1.8
3	64	0 / 0	2.6
Total			13.6

Sign Convention: + = Compression, - = Uplift

Left Corner Force = 1 + 3 = 0 lb

Right Corner Force = 2 + 3 = 0 lb

Surface E2- Overturning Analysis for POSITIVE Wind PARALLEL to Building Ridge

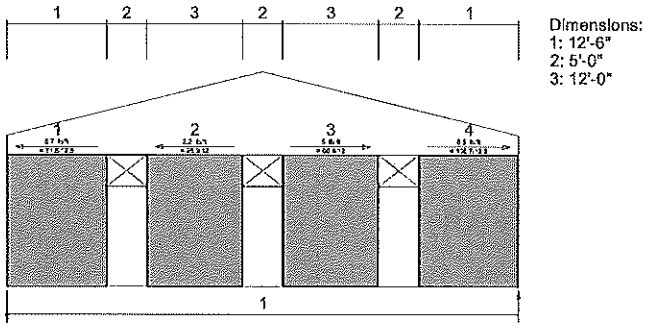

Applied Shear and Overturning Moment

Shear = 69.6 lb at Elev. = 22.67 ft OT Moment = 1577.6 ft-lb

Shear Region	Height (ft)	Width (ft)	Capacity Factor	Shear (lb)	Moment * (ft-lb)
1	16.5	12.5	1	-71.6	-886
2	16.5	12	1	-25.9	-320.5
3	16.5	12	1	60.4	747.4
4	16.5	12.5	1	106.7	1320.4
Total				69.6	1577.6

Maximum Shear (plf): 8.5 = 106.7 / 12.5

* OT Moment is 75% of Shear x Ht (25% assumed resisted at top)

Overturning Resistance

Couple	Arm (ft)	Force L / R (lb)	Moment (ft-lb)
1	64	-24.7 / 24.7	1577.6
Total			1577.6

Sign Convention: + = Compression, - = Uplift

Left Corner Force = 1 = -24.7 lb

Right Corner Force = 1 = 24.7 lb

LESTER BUILDINGS	SURFACE DIAPHRAGM ANALYSIS	Job: 637515
		Page: 22 of 34
	Dealer: Prehn Building Systems Inc.	By: kfl
	Owner: Service Master	Date: 10/6/2026

Surface EP1- Overturning Analysis for POSITIVE Wind PARALLEL to Building Ridge

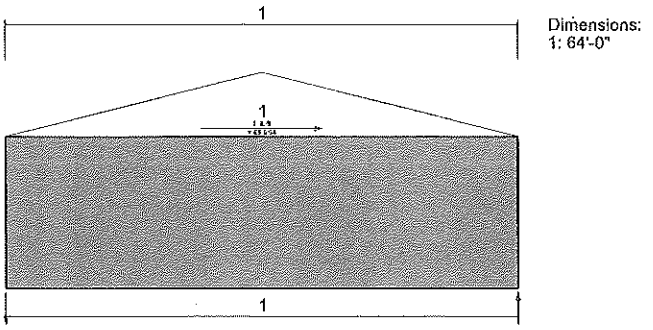

S2 Surface EP1 S1

Applied Shear and Overturning Moment

Shear = 65.9 lb at Elev. = 22.67 ft OT Moment = 1493.7 ft-lb

Shear Region	Height (ft)	Width (ft)	Capacity Factor	Shear (lb)	Moment * (ft-lb)
1	18.92	64	1	65.9	935
Total				65.9	1493.7

Maximum Shear (plf): 1 = 65.9 / 64

* OT Moment is 75% of Shear x Ht (25% assumed resisted at top)

Overturning Resistance

Couple	Arm (ft)	Force L / R (lb)	Moment (ft-lb)
1	64	-23.3 / 23.3	1493.7
Total			1493.7

Sign Convention: + = Compression, - = Uplift

Left Corner Force = 1 = -23.3 lb

Right Corner Force = 1 = 23.3 lb

Surface S1- Overturning Analysis for POSITIVE Wind PARALLEL to Building Ridge

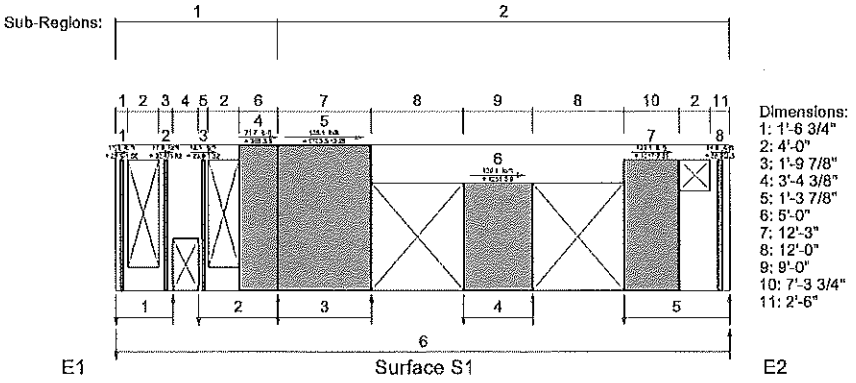

E1 Surface S1 E2

Applied Shear and Overturning Moment

Shear = 4501.4 lb at Elev. = 22.67 ft OT Moment = 102031.7 ft-lb

Shear Region	Height (ft)	Width (ft)	Capacity Factor	Shear (lb)	Moment * (ft-lb)
1	17	1.56	0.25	27.9	355.7
2	17	1.82	0.25	32.4	413.1
3	17	1.32	0.25	23.9	304.7
4	18.92	5	1	358.3	5083.4
5	18.92	12.25	1	1703.5	24168.4
6	14	9	1	1251.5	13140.8
7	17	7.31	1	1017	12966.8
8	17	2.5	0.25	86.9	1108
Total				4501.4	102031.7

Maximum Shear (plf): 139.1 = 1703.5 / 12.25

* OT Moment is 75% of Shear x Ht (25% assumed resisted at top)

Overturning Resistance

Couple	Arm (ft)	Force L / R (lb)	Moment (ft-lb)
1	7.38	-104.1 / 104.1	768.8
2	10.32	-522.1 / 522.1	5388.1
3	12.25	-1972.9 / 1972.9	24168.4
4	9	-1460.1 / 1460.1	13140.8
5	13.81	-1019 / 1019	14074.7
6	80.12	-555.3 / 555.3	44490.9
Total			102031.7

Sign Convention: + = Compression, - = Uplift

Left Corner Force = 1 + 6 = -659.4 lb

Right Corner Force = 5 + 6 = 1574.3 lb

LESTER BUILDINGS	SURFACE DIAPHRAGM ANALYSIS	Job: 637515
		Page: 23 of 34
	Dealer: Prehn Building Systems Inc.	By: kfl
	Owner: Service Master	Date: 10/6/2026

Surface S2- Overturning Analysis for POSITIVE Wind PARALLEL to Building Ridge

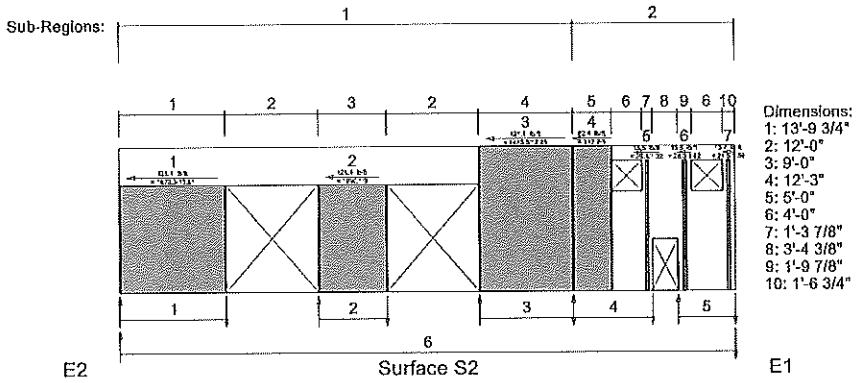

Applied Shear and Overturning Moment

Shear = -4632.7 lb at Elev. = 22.67 ft OT Moment = -105007.9 ft-lb

Shear Region	Height (ft)	Width (ft)	Capacity Factor	Shear (lb)	Moment * (ft-lb)
1	14	13.81	1	-1673.3	-17569.6
2	14	9	1	-1090.1	-11446
3	18.92	12.25	1	-1483.8	-21051.4
4	18.92	5	1	-312.2	-4429.3
5	17	1.32	0.25	-20.4	-260.1
6	17	1.82	0.25	-28.3	-360.8
7	17	1.56	0.25	-24.6	-313.7
Total				-4632.7	-105007.9

Maximum Shear (plf): 121.1 = 1673.3 / 13.81

* OT Moment is 75% of Shear x Ht (25% assumed resisted at top)

Overturning Resistance

Couple	Arm (ft)	Force L / R (lb)	Moment (ft-lb)
1	13.81	1272 / -1272	-17569.6
2	9	1271.8 / -1271.8	-11446.1
3	12.25	1718.5 / -1718.5	-21051.4
4	10.32	454.4 / -454.4	-4689.4
5	7.38	91.4 / -91.4	-674.5
6	80.12	618.7 / -618.7	-49576.8
Total			-105007.9

Sign Convention: + = Compression, - = Uplift

Left Corner Force = 1 + 6 = 1890.7 lb

Right Corner Force = 5 + 6 = -710.1 lb

LESTER BUILDINGS	SURFACE DIAPHRAGM ANALYSIS	Job: 637515
		Page: 24 of 34
	Dealer: Prehn Building Systems Inc.	By: kfl
	Owner: Service Master	Date: 10/6/2026

Building Plan - NEGATIVE Wind Load PARALLEL to Building Ridge

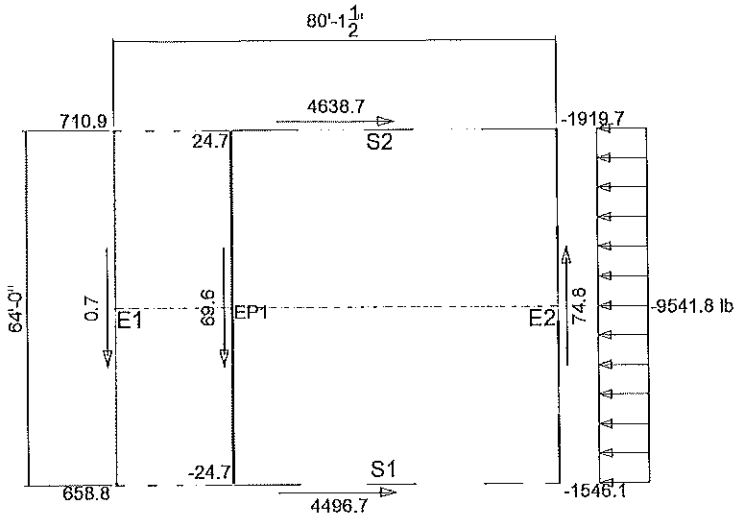

SURFACE DIAPHRAGM ANALYSIS (SDA) RESULTS

Surface	Effective Length (ft)	Applied Shear (lb)	Shear Capacity (lb)	Applied Shear (plf)	Shear Capacity (plf)	DSI	
E1	0.29	0.7	0	0	156	0	OK
E2	49	74.8	14832.3	11	302.7	0.04	OK
EP1	64	69.6	12160	1.1	190	0.01	OK
S1.1	21.06	358	1513.7	71.6	156	0.46	OK
S1.2	59.06	1701.7	9402.6	138.9	302.7	0.89	OK
S2.1	59.06	1675.5	10613.4	121.3	302.7	0.4	OK
S2.2	21.06	312.6	1513.7	62.5	156	0.21	OK
C1.1	21	0	0	0	0	-1	OK
C1.2	59.12	734.2	4257	12.4	72	0.17	OK
R1	80.12	4139.7	15544.2	51.7	194	0.27	OK

Applied Shear Forces obtained from Flexible Diaphragm Analysis.

LESTER BUILDINGS	SURFACE DIAPHRAGM ANALYSIS	Job: 637515
		Page: 25 of 34
	Dealer: Prehn Building Systems Inc.	By: kfl
	Owner: Service Master	Date: 10/6/2026

Roof Horizontal Diaphragm - NEGATIVE Wind Load PARALLEL to Building Ridge

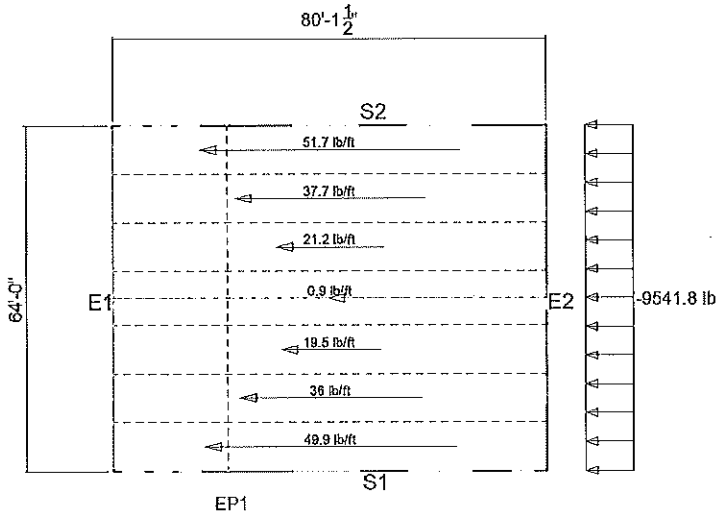

Ceiling Horizontal Diaphragm - NEGATIVE Wind Load PARALLEL to Building Ridge

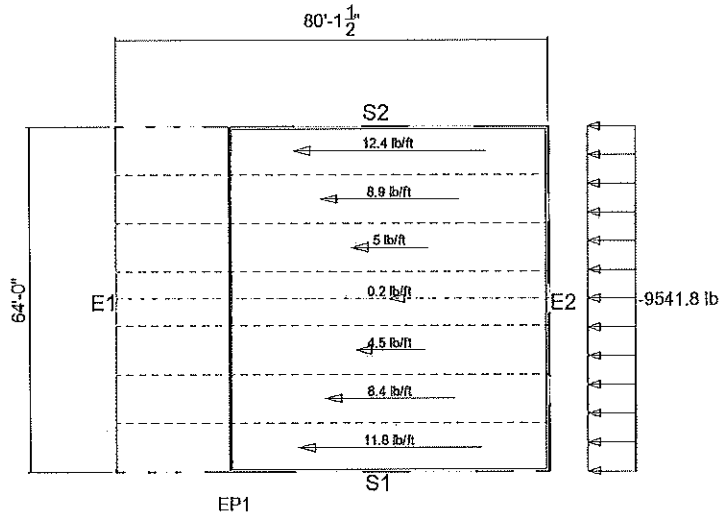

LESTER BUILDINGS	SURFACE DIAPHRAGM ANALYSIS	Job: 637515
		Page: 26 of 34
	Dealer: Prehn Building Systems Inc.	By: kfl
	Owner: Service Master	Date: 10/6/2026

Surface E1- Overturning Analysis for NEGATIVE Wind PARALLEL to Building Ridge

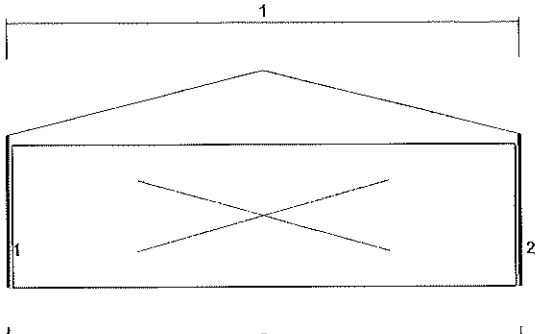

Applied Shear and Overturning Moment

Shear = -0.7 lb at Elev. = 22.67 ft OT Moment = -15.9 ft-lb

Shear Region	Height (ft)	Width (ft)	Capacity Factor	Shear (lb)	Moment * (ft-lb)
1	18.92	0	1	-0.6	-11
2	18.92	0	1	-0.1	-1.8
Total				-0.7	-15.9

Maximum Shear (plf):

* OT Moment is 75% of Shear x Ht (25% assumed resisted at top)

Overturning Resistance

Couple	Arm (ft)	Force L / R (lb)	Moment (ft-lb)
1	0	0 / 0	-11
2	0	0 / 0	-1.8
3	64	0 / 0	-3.1
Total			-15.9

Sign Convention: + = Compression, - = Uplift

Left Corner Force = 1 + 3 = 0 lb

Right Corner Force = 2 + 3 = 0 lb

Surface E2- Overturning Analysis for NEGATIVE Wind PARALLEL to Building Ridge

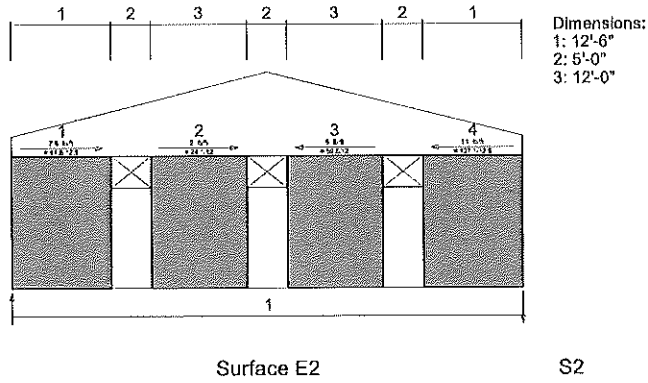

Applied Shear and Overturning Moment

Shear = -74.8 lb at Elev. = 22.67 ft OT Moment = -1695.5 ft-lb

Shear Region	Height (ft)	Width (ft)	Capacity Factor	Shear (lb)	Moment * (ft-lb)
1	16.5	12.5	1	97.8	1210.3
2	16.5	12	1	24.1	298.2
3	16.5	12	1	-59.6	-737.6
4	16.5	12.5	1	-137.1	-1696.6
Total				-74.8	-1695.5

Maximum Shear (plf): 11 = 137.1 / 12.5

* OT Moment is 75% of Shear x Ht (25% assumed resisted at top)

Overturning Resistance

Couple	Arm (ft)	Force L / R (lb)	Moment (ft-lb)
1	64	26.5 / -26.5	-1695.5
Total			-1695.5

Sign Convention: + = Compression, - = Uplift

Left Corner Force = 1 = 26.5 lb

Right Corner Force = 1 = -26.5 lb

LESTER BUILDINGS	SURFACE DIAPHRAGM ANALYSIS	Job: 637515
		Page: 27 of 34
	Dealer: Prehn Building Systems Inc.	By: kfl
	Owner: Service Master	Date: 10/6/2026

Surface EP1- Overturning Analysis for NEGATIVE Wind PARALLEL to Building Ridge

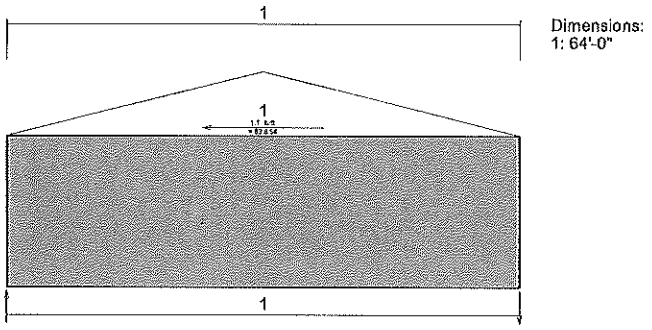

Applied Shear and Overturning Moment

Shear = -69.6 lb at Elev. = 22.67 ft OT Moment = -1577.6 ft-lb

Shear Region	Height (ft)	Width (ft)	Capacity Factor	Shear (lb)	Moment * (ft-lb)
1	18.92	64	1	-69.6	-987.4
Total				-69.6	-1577.6

Maximum Shear (plf): 1.1 = 69.6 / 64

* OT Moment is 75% of Shear x Ht (25% assumed resisted at top)

Overturning Resistance

Couple	Arm (ft)	Force L / R (lb)	Moment (ft-lb)
1	64	24.7 / -24.7	-1577.6
Total			-1577.6

Sign Convention: + = Compression, - = Uplift

Left Corner Force = 1 = 24.7 lb

Right Corner Force = 1 = -24.7 lb

Surface S1- Overturning Analysis for NEGATIVE Wind PARALLEL to Building Ridge

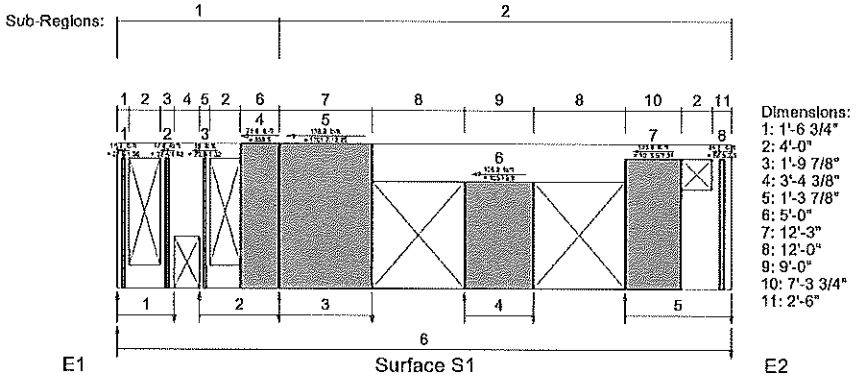

Applied Shear and Overturning Moment

Shear = -4496.7 lb at Elev. = 22.67 ft OT Moment = -101925.2 ft-lb

Shear Region	Height (ft)	Width (ft)	Capacity Factor	Shear (lb)	Moment * (ft-lb)
1	17	1.56	0.25	-27.9	-355.7
2	17	1.82	0.25	-32.4	-413.1
3	17	1.32	0.25	-23.8	-303.4
4	18.92	5	1	-358	-5079.1
5	18.92	12.25	1	-1701.7	-24142.9
6	14	9	1	-1250.2	-13127.1
7	17	7.31	1	-1015.9	-12952.7
8	17	2.5	0.25	-86.8	-1106.7
Total				-4496.7	-101925.2

Maximum Shear (plf): 138.9 = 1701.7 / 12.25

* OT Moment is 75% of Shear x Ht (25% assumed resisted at top)

Overturning Resistance

Couple	Arm (ft)	Force L / R (lb)	Moment (ft-lb)
1	7.38	104.1 / -104.1	-768.8
2	10.32	521.6 / -521.6	-5382.6
3	12.25	1970.8 / -1970.8	-24142.9
4	9	1458.6 / -1458.6	-13127.1
5	13.81	1017.9 / -1017.9	-14059.4
6	80.12	554.7 / -554.7	-44444.4
Total			-101925.2

Sign Convention: + = Compression, - = Uplift

Left Corner Force = 1 + 6 = 658.8 lb

Right Corner Force = 5 + 6 = -1572.6 lb

LESTER BUILDINGS	SURFACE DIAPHRAGM ANALYSIS	Job: 637515
		Page: 28 of 34
	Dealer: Prehn Building Systems Inc.	By: kfl
	Owner: Service Master	Date: 10/6/2026

Surface S2- Overturning Analysis for NEGATIVE Wind PARALLEL to Building Ridge

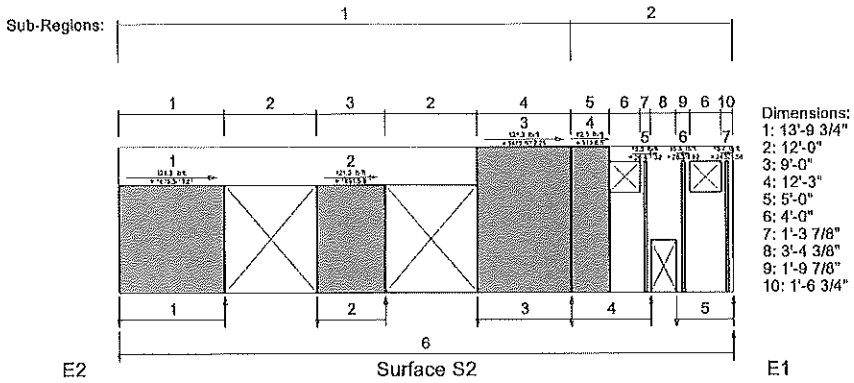

Applied Shear and Overturning Moment

Shear = 4638.7 lb at Elev. = 22.67 ft OT Moment = 105143.9 ft-lb

Shear Region	Height (ft)	Width (ft)	Capacity Factor	Shear (lb)	Moment * (ft-lb)
1	14	13.81	1	1675.5	17592.8
2	14	9	1	1091.5	11460.8
3	18.92	12.25	1	1485.8	21079.8
4	18.92	5	1	312.6	4435
5	17	1.32	0.25	20.4	260.1
6	17	1.82	0.25	28.3	360.8
7	17	1.56	0.25	24.6	313.7
Total				4638.7	105143.9

Maximum Shear (plf): 121.3 = 1675.5 / 13.81

* OT Moment is 75% of Shear x Ht (25% assumed resisted at top)

Overturning Resistance

Couple	Arm (ft)	Force L / R (lb)	Moment (ft-lb)
1	13.81	-1273.7 / 1273.7	17592.8
2	9	-1273.4 / 1273.4	11460.8
3	12.25	-1720.8 / 1720.8	21079.8
4	10.32	-454.9 / 454.9	4695.1
5	7.38	-91.4 / 91.4	674.5
6	80.12	-619.5 / 619.5	49641
Total			105143.9

Sign Convention: + = Compression, - = Uplift

Left Corner Force = 1 + 6 = -1893.2 lb

Right Corner Force = 5 + 6 = 710.9 lb

LESTER BUILDINGS	BUILDING UPLIFT ANALYSIS	Job: 637515
		Page: 29 of 34
	Dealer: Prehn Building Systems Inc.	By: kfl
	Owner: Service Master	Date: 10/6/2026

BUILDING UPLIFT FORCES

All Wind Load Cases: Positive Force = Bearing, Negative Force = Uplift

Corner Forces - POSITIVE Wind PERPENDICULAR to Building Ridge

Corner	Force (lb)	Equation
E1-S1	93.3	= -1.3 (E1) + 94.6 (S1)
S2-E1	-103.8	= -105.1 (S2) + 1.3 (E1)
E2-S1	-1533.6	= -1224.8 (E2) + -308.8 (S1)
E2-S2	1570.7	= 1224.8 (E2) + 345.9 (S2)

Corner Forces - NEGATIVE Wind PERPENDICULAR to Building Ridge

Corner	Force (lb)	Equation
E1-S1	-96.9	= 1.3 (E1) + -98.2 (S1)
S2-E1	100.7	= 102 (S2) + -1.3 (E1)
E2-S1	1535	= 1225.8 (E2) + 309.2 (S1)
E2-S2	-1583.6	= -1225.8 (E2) + -357.8 (S2)

Corner Forces - POSITIVE Wind PARALLEL to Building Ridge

Corner	Force (lb)	Equation
E1-S1	-659.4	= 0 (E1) + -659.4 (S1)
S2-E1	-710.1	= -710.1 (S2) + 0 (E1)
E2-S1	1549.6	= -24.7 (E2) + 1574.3 (S1)
E2-S2	1915.4	= 24.7 (E2) + 1890.7 (S2)

Corner Forces - NEGATIVE Wind PARALLEL to Building Ridge

Corner	Force (lb)	Equation
E1-S1	658.8	= 0 (E1) + 658.8 (S1)
S2-E1	710.9	= 710.9 (S2) + 0 (E1)
E2-S1	-1546.1	= 26.5 (E2) + -1572.6 (S1)
E2-S2	-1919.7	= -26.5 (E2) + -1893.2 (S2)

BUILDING PLAN - Maximum Uplift Forces

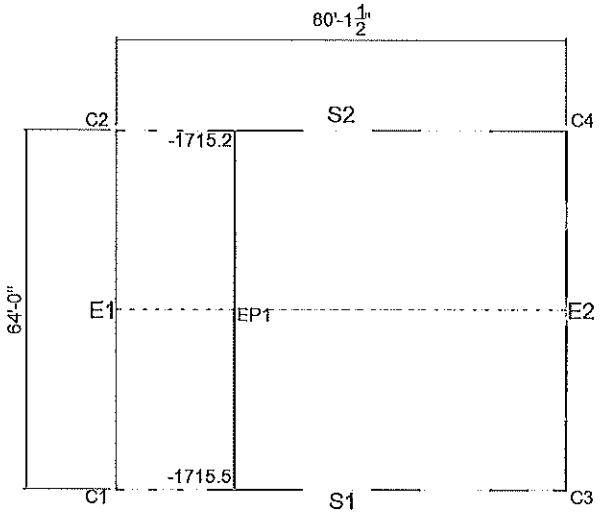

Max. Corner Uplift Forces
C1: -659.4 lb = 0 (E1) + -659.4 (S1)
C2: -710.1 lb = -710.1 (S2) + 0 (E1)
C3: -1546.1 lb = 26.5 (E2) + -1572.6 (S1)
C4: -1919.7 lb = -26.5 (E2) + -1893.2 (S2)

LESTER BUILDINGS	BUILDING UPLIFT ANALYSIS	Job: 637515
		Page: 30 of 34
	Dealer: Prehn Building Systems Inc.	By: kfl
	Owner: Service Master	Date: 10/6/2026

BUILDING UPLIFT RESISTANCE CALCULATION

Building Corner Uplift Resistance Calculation

```
Max. Corner Uplift Force: 1919.7 lb
Building Dead Load:       3805.3 lb = 0.6 x (1280 + 612 + 704 + 3746.1)
     Ceiling:             1280 lb = (10) x (8/2) x (64/2)
     Roof:                612 lb = (4) x (8/2 + 0.5) x (64/2 + 2)
     End Wall Gable:      704 lb = 5.5 x (3 /12) x (64/2) x (64/2)/2
     End & Side Wall:     3746.1 lb = 5.5 x 18.92 x 64/2 + 5.5 x 18.92 x 8/2
Net Corner Uplift Force:  0 lb (-1885.6 lb = 1919.7 - 3805.3 < 0)

Req'd Bldg. + Found. Wt. to Resist OT With Safety Factor = 1.5
    2879.6 lb = 1.5 x (1919.7)
Req'd Found. Wt. to Resist OT: 0 lb (-925.7 lb = 2879.6 - 3805.3 < 0)
```

OT Safety Factor With Bldg. Wt. Alone: 1.98 = 3805.3 / 1919.7

NOTE: This calculation uses 1/2 building width for DL.
This is informational only. Corner column embedment calculations are separate with DL calculation based on corner column tributary area.

COLUMN S1:C6 UPLIFT RESISTANCE CALCULATION

Boundary Column for Partition: EP1

SUMMARY OF UPLIFT RESULTS: S1:C6

Use: Anchor Blocks

Uplift Resistance:	OK	Uplift Resistance Force:	3020.6 lb
Required Embedment Depth:	4'-0"	Factor of Safety:	1.94

INPUTS FOR UPLIFT RESISTANCE CALCULATION

```
Foundation Type:          26" DIA X 8" THK POURED FOOTING, 0.091 CYD
Anchorage Type:           Anchor Angle - Where Req.

Uplift Force:               2550.7 lb   (From: Column Reaction)
```

UPLIFT RESISTANCE CALCULATIONS - Anchor Blocks

```
Building Dead Load:         1920.1 lb ( = 0.6 x 2961.1 + 1 x 143.4)
Anchor Block Width:       0'-3" (0.25 ft)
Req'd Uplift Safety Factor: 1.5

Footing Diameter:           2'-2" (2.167 ft)
Minimum Embedment Depth:    4'-0"

Column Dimensions W x D:    0'-6" (0.5 ft) x 0'-5 1/2" (0.458 ft)
```

FOUNDATION UPLIFT RESISTANCE CALCULATION

```
Maximum Uplift Force = 2550.7 lb   (From: Column Reaction)
Building Dead Load = 1920.1 lb
Net Uplift Force = 630.6 lb = 2550.7 - 1920.1
Required Building + Foundation Weight to Resist Uplift With Safety Factor = 1.5
     3826 lb = 1.5 x 2550.7
Required Foundation Weight to Resist Uplift = 1905.9 lb = 3826 - 1920.1
Uplift Safety Factor With Building Weight Alone = 0.75 = 1920.1 / 2550.7

Anchor Block Length:      0'-5 1/2" (0.458 ft)
```

LESTER BUILDINGS	BUILDING UPLIFT ANALYSIS	Job: 637515
		Page: 31 of 34
	Dealer: Prehn Building Systems Inc.	By: kfl
	Owner: Service Master	Date: 10/6/2026

BUILDING UPLIFT RESISTANCE CALCULATION (Continued)

Soil Unit Weight = 110 pcf, Soil Cone Angle = 34 deg.
Anchor Block Height = 7.5 in = 0.625 ft
Total Foundation Uplift Resistance = Soil Cone Weight
Uplift Resistance Limited by Anchor Block Capacity = 4880 lb

Soil Cone Base Diameter calculated from area of Column Base including Anchor Blocks.
Soil Cone Base Diameter = Sqrt((0.5 + 0.25) x (0.458 + 0) x 4 / pi) = 0.662 ft
Embedment Depth = 4'-0" = 4 ft
Soil Cone Height = Embedment Depth - Anchor Block Height = 4 - 0.625 = 3.375 ft
Soil Cone Top Diameter = 0.662 + 2 x 3.375 x Tan(34) = 5.215 ft
Soil Cone Volume = pi x 3.375 x (0.662^2 + 5.215^2 + 0.662 x 5.215) / 12 = 27.46 cu ft
Soil Cone Weight = Soil Cone Volume x 110 pcf = 27.46 x 110 = 3020.6 lb

Total Foundation Uplift Resistance = 3020.6 lb

Uplift is OK if (Bldg DL + Uplift Resistance) x Allow. Overage >= Reqd SF x Max Uplift Force
(Bldg DL + Uplift Resistance) x Allow. Overage = (1920.1 + 3020.6) x 1.03 = 5088.9 lb
Reqd Safety Factor x Max Uplift Force = 1.5 x 2550.7 = 3826 lb
Uplift Resistance is OK

Safety Factor against Uplift = (1920.1 + 3020.6) / 2550.7 = 1.94

LESTER BUILDINGS	BUILDING STABILITY ANALYSIS	Job: 637515
		Page: 32 of 34
	Dealer: Prehn Building Systems Inc.	By: kfl
	Owner: Service Master	Date: 10/6/2026

BUILDING STABILITY ANALYSIS - LUI Method

—

Column Properties

Perpendicular to Building Ridge

Column	Grid	Length L (in)	EI (10^6 lb-in²)	Axial Load P (lb)[1]	Moment Ratio m (--)[2]	K Index n [3]	P/L (lb/in)
S1:C1	F1	219.5	99.84	4315.9	0	28.32	19.65
S1:C2	F2	219.5	149.76	8419	0	42.48	38.35
S1:C3	F2.1	219.5	474.86	3784.1	0	134.7	17.24
S1:C5	F3.1	219.5	474.86	3784.1	0	134.7	17.24
S1:C7	F5	219.5	149.76	8419	0	42.48	38.35
S1:C8	F6	219.5	149.76	8246.9	0	42.48	37.57
S1:C10	F7.1	219.5	99.84	601.3	0	28.32	2.74
S1:C11	F8	219.5	149.76	8419	0	42.48	38.35
S1:C12	F8.1	219.5	112.32	659.9	0	31.86	3.01
S1:C15	F10.1	219.5	99.84	601.3	0	28.32	2.74
S1:C16	F11	219.5	149.76	7633.9	0	42.48	34.78
S1:C17	F11.1	219.5	99.84	470.9	0	28.32	2.15
S2:C2	F11	219.5	149.76	8419	0	42.48	38.35
S2:C3	F10.1	219.5	112.32	659.9	0	31.86	3.01
S2:C6	F8.1	219.5	99.84	601.3	0	28.32	2.74
S2:C7	F8	219.5	149.76	8419	0	42.48	38.35
S2:C8	F7.1	219.5	112.32	659.9	0	31.86	3.01
S2:C10	F6	219.5	149.76	8246.9	0	42.48	37.57
S2:C11	F5	219.5	149.76	8419	0	42.48	38.35
S2:C13	F3.1	219.5	99.84	467.6	0	28.32	2.13
S2:C15	F2.1	219.5	99.84	467.6	0	28.32	2.13
S2:C16	F2	219.5	149.76	8419	0	42.48	38.35
S2:C17	F1	219.5	99.84	4315.9	0	28.32	19.65
					Total	1016.34	475.9

Parallel to Building Ridge

Column	Grid	Length L (in)	EI (10^6 lb-in²)	Axial Load P (lb)[1]	Moment Ratio m (--)[2]	K Index n [3]	P/L (lb/in)
E2:C2	G2	216	99.84	2208.1	0.86	101.75	10.22
E2:C3	G3	216	99.84	2335	0.83	97.97	10.81
E2:C4	G4	216	99.84	2589.3	0.79	92.92	11.99
E2:C5	G5	216	99.84	2589.3	0.79	92.92	11.99
E2:C6	G6	216	99.84	2335	0.83	97.97	10.81
E2:C7	G7	216	99.84	2208.1	0.86	101.75	10.22
EP1:C2	G7.1	216	99.84	2274.7	0.44	58.87	10.53
EP1:C3	G6.1	216	99.84	2376.2	0.61	74.21	11
EP1:C4	G5.1	216	99.84	2477.5	0.66	79.03	11.47
EP1:C5	G4.1	216	99.84	2579	0.66	79.44	11.94
EP1:C6	G3.1	216	99.84	2477.5	0.66	79.03	11.47
EP1:C7	G2.1	216	99.84	2376.2	0.61	74.21	11
EP1:C8	G1.1	216	99.84	2274.7	0.44	58.87	10.53
					Total	1088.94	143.98

[1] From D+S analysis of building
[2] Ma / Mb From Wind analysis of building
[3] Equation 22 from Lui Paper: $n=(3+4.8m+4.2m^2)EI/L^3$

LESTER BUILDINGS	BUILDING STABILITY ANALYSIS	Job: 637515
		Page: 33 of 34
	Dealer: Prehn Building Systems Inc.	By: kfl
	Owner: Service Master	Date: 10/6/2026

BUILDING STABILITY ANALYSIS - LUI Method (Continued)

Frame Deflection and Frame Reactions in Columns Only

Perpendicular to Building Ridge

Grid	Deflection (in)	Col React (lb)
F1	0.33	18.7
F2	0.31	45.3
F3	0.28	59
F4	0.23	0
F5	0.25	21.4
F6	0.3	25.4
F7	0.32	8.6
F8	0.32	45.4
F9	0.3	11.4
F10	0.25	12.4
F11	0.18	19
F12	0.1	0
Total		266.6

Weighted Average Deflection = 0.29 in
Total Load on Building = 8569.6 lb

Parallel to Building Ridge

Grid	Deflection (in)	Col React (lb)
G1	0.2	0.4
G2	0.35	52.6
G3	0.45	71.8
G4	0.5	81.2
G5	0.5	80.8
G6	0.44	70.2
G7	0.33	49.8
G8	0.18	0
Total		406.8

Weighted Average Deflection = 0.44 in
Total Load on Building = 9541.8 lb

Calculate Constant for Ke Equation

Perpendicular to Building Ridge

Building Load = 8569.6 lb
Building Deflection = 0.29 in
Sum of n for all columns = 1016.34
Sum of P/L for all columns = 475.9
Constant = pi^2 x Sum P/L x (1 / (5 x sum n) + Bldg Deflection / Bldg Load)
Constant = pi^2 x 475.9 x (1 / (5 x 1016.34) + 0.29 / 8569.6)
Constant = 1.0832

Parallel to Building Ridge

Building Load = 9541.8 lb
Building Deflection = 0.44 in
Sum of n for all columns = 1088.94
Sum of P/L for all columns = 143.98
Constant = pi^2 x Sum P/L x (1 / (5 x sum n) + Bldg Deflection / Bldg Load)
Constant = pi^2 x 143.98 x (1 / (5 x 1088.94) + 0.44 / 9541.8)
Constant = 0.3265

LESTER BUILDINGS	BUILDING STABILITY ANALYSIS	Job: 637515
		Page: 34 of 34
	Dealer: Prehn Building Systems Inc.	By: kfl
	Owner: Service Master	Date: 10/6/2026

BUILDING STABILITY ANALYSIS - LUI Method (Continued)

Calculate Column Ke

Ke = Sqrt[Constant x EI / (P x L²)]

Perpendicular to Building Ridge

Column	Ke	Equation
S1:C1	0.72	= Sqrt[1.0832 x 99840000 / (4315.9 x 219.5²)] {1}
S1:C2	0.63	= Sqrt[1.0832 x 149760000 / (8419 x 219.5²)] {1}
S1:C3	1.68	= Sqrt[1.0832 x 474860000 / (3784.1 x 219.5²)] {1}
S1:C5	1.68	= Sqrt[1.0832 x 474860000 / (3784.1 x 219.5²)] {1}
S1:C7	0.63	= Sqrt[1.0832 x 149760000 / (8419 x 219.5²)] {1}
S1:C8	0.64	= Sqrt[1.0832 x 149760000 / (8246.9 x 219.5²)] {1}
S1:C10	1.93	= Sqrt[1.0832 x 99840000 / (601.3 x 219.5²)] {1}
S1:C11	0.63	= Sqrt[1.0832 x 149760000 / (8419 x 219.5²)] {1}
S1:C12	1.96	= Sqrt[1.0832 x 112320000 / (659.9 x 219.5²)] {1}
S1:C15	1.93	= Sqrt[1.0832 x 99840000 / (601.3 x 219.5²)] {1}
S1:C16	0.66	= Sqrt[1.0832 x 149760000 / (7633.9 x 219.5²)] {1}
S1:C17	2.18	= Sqrt[1.0832 x 99840000 / (470.9 x 219.5²)] {1}
S2:C2	0.63	= Sqrt[1.0832 x 149760000 / (8419 x 219.5²)] {1}
S2:C3	1.96	= Sqrt[1.0832 x 112320000 / (659.9 x 219.5²)] {1}
S2:C6	1.93	= Sqrt[1.0832 x 99840000 / (601.3 x 219.5²)] {1}
S2:C7	0.63	= Sqrt[1.0832 x 149760000 / (8419 x 219.5²)] {1}
S2:C8	1.96	= Sqrt[1.0832 x 112320000 / (659.9 x 219.5²)] {1}
S2:C10	0.64	= Sqrt[1.0832 x 149760000 / (8246.9 x 219.5²)] {1}
S2:C11	0.63	= Sqrt[1.0832 x 149760000 / (8419 x 219.5²)] {1}
S2:C13	2.19	= Sqrt[1.0832 x 99840000 / (467.6 x 219.5²)] {1}
S2:C15	2.19	= Sqrt[1.0832 x 99840000 / (467.6 x 219.5²)] {1}
S2:C16	0.63	= Sqrt[1.0832 x 149760000 / (8419 x 219.5²)] {1}
S2:C17	0.72	= Sqrt[1.0832 x 99840000 / (4315.9 x 219.5²)] {1}

Parallel to Building Ridge

Column	Ke	Equation
E2:C2	0.56	= Sqrt[0.3265 x 99840000 / (2208.1 x 216²)] {2}
E2:C3	0.55	= Sqrt[0.3265 x 99840000 / (2335 x 216²)] {2}
E2:C4	0.52	= Sqrt[0.3265 x 99840000 / (2589.3 x 216²)] {2}
E2:C5	0.52	= Sqrt[0.3265 x 99840000 / (2589.3 x 216²)] {2}
E2:C6	0.55	= Sqrt[0.3265 x 99840000 / (2335 x 216²)] {2}
E2:C7	0.56	= Sqrt[0.3265 x 99840000 / (2208.1 x 216²)] {2}
EP1:C2	0.55	= Sqrt[0.3265 x 99840000 / (2274.7 x 216²)] {2}
EP1:C3	0.54	= Sqrt[0.3265 x 99840000 / (2376.2 x 216²)] {2}
EP1:C4	0.53	= Sqrt[0.3265 x 99840000 / (2477.5 x 216²)] {2}
EP1:C5	0.52	= Sqrt[0.3265 x 99840000 / (2579 x 216²)] {2}
EP1:C6	0.53	= Sqrt[0.3265 x 99840000 / (2477.5 x 216²)] {2}
EP1:C7	0.54	= Sqrt[0.3265 x 99840000 / (2376.2 x 216²)] {2}
EP1:C8	0.55	= Sqrt[0.3265 x 99840000 / (2274.7 x 216²)] {2}

Idealized Column Ke Values

	Base	Top	Non-Sway Ke	Sway Ke
1	Fixed	Pinned	0.8	2.1
2	Fixed	PartialFixity	0.65	1.2

Note: Calculated Column Ke values above will be compared to the idealized Non-Sway Ke value for the column and the more conservative value will be used to calculate CSIs.

LESTER BUILDINGS	CONNECTION SUMMARY	Job: T06A-15079-08-05
		Page: 1 of 7
	Dealer: Prehn Building Systems Inc.	By: Improv
	Owner: Service Master	Date: 10/1/2026

CONNECTION SUMMARY

—

Typical Truss to Column Connection

(9) 1/4"X6" FlatLOK, High, Uni
Allowable Fy (Fasteners Only w/ Cd = 1) = 4572 lb
Allowable Bearing Force = 10906.5 lb = 661 psi x 5.5 in x 3 in
Applied Force (To be resisted by Fasteners Alone):
Fy_Neg = 950.7 (-1521.1 w/ Cd = 1.6), Fy_Pos = 3622.2 (4165.5 w/ Cd = 1.15)
All Net Bearing Reactions are less than Allowable Bearing Force (10906.5 lb)

Bearing Reaction

Maximum Reaction = 15072 lb D+S

Allowable Bearing = 10906.5 lb = 661 psi x 5.5 in x 3 in
Connection Capacity = 5257.8 lb = 4572 x 1.15
Allowable Reaction = 16164.3 lb OK

Required Bearing Length

4.95 in = (15072 - 4572 x 1.15) / (3 x 661)

Uplift Reaction

Maximum Reaction = -1521.1 lb .6D+Wp

Connection Capacity = 7315.2 lb = 4572 x 1.6
Allowable Reaction = 7315.2 lb OK

Structural Header Connections

H:S1:D15 - 5.38 x 11.75 Beam Pocket
(20) 10d Nails to Header
(10) TrussLokZ Screws to Column

H:S2:D12 - (11) 10d nails and (2) JA3

H:S2:D16 - 5.38 x 11.75 Beam Pocket
(20) 10d Nails to Header
(10) TrussLokZ Screws to Column

H:S1:D5 - (11) 10d nails and (2) JA3

H:S1:D6 - (11) 10d nails and (2) JA3

H:S1:D14 - 5.38 x 11.75 Beam Pocket
(20) 10d Nails to Header
(10) TrussLokZ Screws to Column

H:S2:D17 - 5.38 x 11.75 Beam Pocket
(20) 10d Nails to Header
(10) TrussLokZ Screws to Column

Purlin Connections

Design Case - PR1:

2x6 full saddle hanger 2 ply (ConnID = trusspurlin006) (LBSKit = 741195)
Fy_Neg = 131.9 (-211 w/ Cd = 1.6), Fy_Pos = 272 (312.8 w/ Cd = 1.15)
Allowable Force = 419 lb

LESTER BUILDINGS	CONNECTION SUMMARY	Job: T06A-15079-08-05
		Page: 2 of 7
	Dealer: Prehn Building Systems Inc.	By: Improv
	Owner: Service Master	Date: 10/1/2026

CONNECTION SUMMARY (Continued)

Design Case - PR2:
2x6 full saddle hanger 2 ply (ConnID = trusspurlin006) (LBSKit = 741195)
Fy_Neg = 153.3 (-245.3 w/ Cd = 1.6), Fy_Pos = 310 (356.5 w/ Cd = 1.15)
Allowable Force = 419 lb

Girt Connections

Design Case - GL1:
(4) 10d Galv Box nails (ConnID = linergirt001) (LBSKit = 040076)

Design Case - GW4 (End):
Location: E2, E1
(2) 16d R.S. nails plus 3 percent (ConnID = wallgirt_BP_End_GrTh2x4) (LBSKit = 040140)
Fy_Neg = 155.9 (-249.4 w/ Cd = 1.6)
Allowable Force = 160 lb

Design Case - GW4 (Intermediate):
Location: E2, E1
(2) 16d R.S. nails plus 3 percent (ConnID = wallgirt_BP_Intm_GrTh2x4) (LBSKit = 040140)
Fy_Neg = 155.9 (-249.4 w/ Cd = 1.6)
Allowable Force = 160 lb

Design Case - GW1 (End):
Location: S1, S2
(2) 16d R.S. nails plus 3 percent (ConnID = wallgirt_BP_End_GrTh2x4) (LBSKit = 040140)
Fy_Neg = 155.9 (-249.4 w/ Cd = 1.6)
Allowable Force = 160 lb

Design Case - GW1 (Intermediate):
Location: S1, S2
(2) 16d R.S. nails plus 3 percent (ConnID = wallgirt_BP_Intm_GrTh2x4) (LBSKit = 040140)
Fy_Neg = 155.9 (-249.4 w/ Cd = 1.6)
Allowable Force = 160 lb

Design Case - GP1:
(4) 10d Galv Box nails (ConnID = linergirt001) (LBSKit = 040076)
NA
Allowable Force = 0 lb

The following Wall, Liner and/or Partition Girt design cases were not used:
GW2,GW3

EW Column Bracing Summary

E1:C2 (VS) - Bottom Chord Brace Only

E1:C3 (VS) - Diagonal Gable Brace with Bottom Chord Brace

E1:C4 (VS) - Diagonal Gable Brace with Bottom Chord Brace

E1:C5 (VS) - Diagonal Gable Brace with Bottom Chord Brace

E1:C6 (VS) - Diagonal Gable Brace with Bottom Chord Brace

E1:C7 (VS) - Diagonal Gable Brace with Bottom Chord Brace

E1:C8 (VS) - Bottom Chord Brace Only

E2:C2 - Diagonal Gable Brace with Bottom Chord Brace

LESTER BUILDINGS	CONNECTION SUMMARY	Job: T06A-15079-08-05
		Page: 3 of 7
	Dealer: Prehn Building Systems Inc.	By: Improv
	Owner: Service Master	Date: 10/1/2026

CONNECTION SUMMARY (Continued)

E2:C3 - Diagonal Gable Brace with Bottom Chord Brace

E2:C4 - Single Gable X Brace

E2:C5 - Single Gable X Brace

E2:C6 - Diagonal Gable Brace with Bottom Chord Brace

E2:C7 - Diagonal Gable Brace with Bottom Chord Brace

LESTER BUILDINGS	CONNECTION SUMMARY	Job: T06A-15079-08-05
		Page: 4 of 7
	Dealer: Prehn Building Systems Inc.	By: Improv
	Owner: Service Master	Date: 10/1/2026

CONNECTION SUMMARY (Continued)

SW Wind Header Connections

WH:S1:C3 2x12 DFL/SYP M-23/2400 MSR 1.8E
Max Load from supported Jamb Column = 243 lb
Connection to Left Supporting Column:
(2) JA-5 screws and 10d box (LBSKit: 741233) (Allow. Load = 2659 lb)
Connection to Right Supporting Column:
(2) JA-5 screws and 10d box (LBSKit: 741233) (Allow. Load = 2659 lb)
Connection to Supported Jamb Column:
(5) 16d rs each for 2 plys (Detail: HD660) (LBSKit: 040140) (Allow. Load = 1426 lb) OK

WH:S1:C5 2x12 DFL/SYP M-23/2400 MSR 1.8E
Max Load from supported Jamb Column = 243 lb
Connection to Left Supporting Column:
(2) JA-5 screws and 10d box (LBSKit: 741233) (Allow. Load = 2659 lb)
Connection to Right Supporting Column:
(2) JA-5 screws and 10d box (LBSKit: 741233) (Allow. Load = 2659 lb)
Connection to Supported Jamb Column:
(5) 16d rs each for 2 plys (Detail: HD660) (LBSKit: 040140) (Allow. Load = 1426 lb) OK

WH:S1:C10 2x8 DFL/SYP M-23/2400 MSR 1.8E
Max Load from supported Jamb Column = 414.6 lb
Connection to Left Supporting Column:
(2) JA-3 screws and 10d box (LBSKit: 741231) (Allow. Load = 1773 lb)
Connection to Right Supporting Column:
(2) JA-3 screws and 10d box (LBSKit: 741231) (Allow. Load = 1773 lb)
Connection to Supported Jamb Column:
(3) 16d rs each for 2 plys (Detail: HD660) (LBSKit: 040140) (Allow. Load = 855 lb) OK

WH:S1:C12 2x8 DFL/SYP M-23/2400 MSR 1.8E
Max Load from supported Jamb Column = 439.8 lb
Connection to Left Supporting Column:
(2) JA-3 screws and 10d box (LBSKit: 741231) (Allow. Load = 1773 lb)
Connection to Right Supporting Column:
(2) JA-3 screws and 10d box (LBSKit: 741231) (Allow. Load = 1773 lb)
Connection to Supported Jamb Column:
(3) 16d rs each for 2 plys (Detail: HD660) (LBSKit: 040140) (Allow. Load = 855 lb) OK

WH:S1:C15 2x8 DFL/SYP M-23/2400 MSR 1.8E
Max Load from supported Jamb Column = 414.6 lb
Connection to Left Supporting Column:
(2) JA-3 screws and 10d box (LBSKit: 741231) (Allow. Load = 1773 lb)
Connection to Right Supporting Column:
(2) JA-3 screws and 10d box (LBSKit: 741231) (Allow. Load = 1773 lb)
Connection to Supported Jamb Column:
(3) 16d rs each for 2 plys (Detail: HD660) (LBSKit: 040140) (Allow. Load = 855 lb) OK

WH:S1:C17 2x8 DFL/SYP M-23/2400 MSR 1.8E
Max Load from supported Jamb Column = 252.6 lb
Connection to Left Supporting Column:
(2) JA-3 screws and 10d box (LBSKit: 741231) (Allow. Load = 1773 lb)
Connection to Right Supporting Column:
(2) JA-3 screws and 10d box (LBSKit: 741231) (Allow. Load = 1773 lb)
Connection to Supported Jamb Column:
(3) 16d rs each for 2 plys (Detail: HD660) (LBSKit: 040140) (Allow. Load = 855 lb) OK

WH:S2:C3 2x8 DFL/SYP M-23/2400 MSR 1.8E
Max Load from supported Jamb Column = 439.8 lb
Connection to Left Supporting Column:
(2) JA-3 screws and 10d box (LBSKit: 741231) (Allow. Load = 1773 lb)
Connection to Right Supporting Column:
(2) JA-3 screws and 10d box (LBSKit: 741231) (Allow. Load = 1773 lb)
Connection to Supported Jamb Column:
(3) 16d rs each for 2 plys (Detail: HD660) (LBSKit: 040140) (Allow. Load = 855 lb) OK

LESTER BUILDINGS	CONNECTION SUMMARY	Job: T06A-15079-08-05
		Page: 5 of 7
	Dealer: Prehn Building Systems Inc.	By: Improv
	Owner: Service Master	Date: 10/1/2026

CONNECTION SUMMARY (Continued)

Column Schedule

```
1,17,18    S1:C2, S1:C6, S1:C7, S1:C11, S1:C16, S2:C2, S2:C7, S2:C11, S2:C12, S2:C16
2    S1:C18, S2:C1
3    E2:C2, E2:C7
4    E2:C3, E2:C6
5    E2:C4, E2:C5
6    S1:C1, S2:C17
7    S1:C3
8    S1:C4 [Stub Column]
9    S1:C5
10    S1:C8, S2:C10
11    S1:C10, S1:C12, S1:C15, S2:C3, S2:C6, S2:C8
12    S1:C17, S2:C13, S2:C15
13    EP1:C2, EP1:C8
14    EP1:C3, EP1:C7
15    EP1:C4, EP1:C6
16    EP1:C5
VS1    E1:C2, E1:C8
VS2    E1:C3, E1:C7
VS3    E1:C4, E1:C6
VS4    E1:C5
```

Column Sections

```
1   FS6666
17   FS6666
18   FS6666
2   FE666
3   FE666
4   FE666
5   FE666
6   FE666
7   FS00J0
8   FS0000
9   J0FS00
10   FS6666
11   FS66P6
12   FS66P6
13   FE666
14   FE666
15   FE666
16   FE666
VS1   FE66
VS2   FE66
VS3   FE66
VS4   FE66
```

Column Anchorage

```
Columns S1:C2, S1:C7, S1:C11, S2:C2, S2:C7, S2:C11,
        S2:C16  [Schedule: 1]  [Design Member ID: SW Column]
 Connection Class: U-1: Anchor Block - Anchor Angle Where Reqd
 Net Uplift Force = 614.3 lb    Uplift Resistance = 4353.7 lb
  Use Anchor Block
```

LESTER BUILDINGS	CONNECTION SUMMARY	Job: T06A-15079-08-05
		Page: 6 of 7
	Dealer: Prehn Building Systems Inc.	By: Improv
	Owner: Service Master	Date: 10/1/2026

CONNECTION SUMMARY (Continued)

Columns S1:C6, S2:C12 [Schedule: 17] [Design Member ID: S1:C6]
Connection Class: U-1: Anchor Block - Anchor Angle Where Reqd
Net Uplift Force = 630.6 lb Uplift Resistance = 3020.6 lb
Use Anchor Block

Columns S1:C16 [Schedule: 18]
Connection Class: U-1: Anchor Block - Anchor Angle Where Reqd
Net Uplift Force = 947.1 lb Uplift Resistance = 3020.6 lb
Use Anchor Block

Columns S1:C18, S2:C1 [Schedule: 2] [Design Member ID: Corner Column]
Connection Class: U-1: Anchor Block - Anchor Angle Where Reqd
Net Uplift Force = 1155.2 lb Uplift Resistance = 2922.8 lb
Use Anchor Block

Columns E2:C2, E2:C7 [Schedule: 3] [Design Member ID: E2:C2]
Connection Class: U-1: Anchor Block - Anchor Angle Where Reqd
No Net Uplift Load at this column.
Use Anchor Block

Columns E2:C3, E2:C6 [Schedule: 4] [Design Member ID: E2:C3]
Connection Class: U-1: Anchor Block - Anchor Angle Where Reqd
No Net Uplift Load at this column.
Use Anchor Block

Columns E2:C4, E2:C5 [Schedule: 5] [Design Member ID: E2:C4]
Connection Class: U-1: Anchor Block - Anchor Angle Where Reqd
No Net Uplift Load at this column.
Use Anchor Block

Columns S1:C1 [Schedule: 6]
Connection Class: U-1: Anchor Block - Anchor Angle Where Reqd
Net Uplift Force = 538.9 lb Uplift Resistance = 2922.8 lb
Use Anchor Block

Columns S2:C17 [Schedule: 6]
Connection Class: U-1: Anchor Block - Anchor Angle Where Reqd
Net Uplift Force = 538.9 lb Uplift Resistance = 2922.8 lb
Use Anchor Block

Columns S1:C3 [Schedule: 7]
Connection Class: U-1: Anchor Block - Anchor Angle Where Reqd
Net Uplift Force = 242.8 lb Uplift Resistance = 3233.3 lb
Use Anchor Block

Columns S1:C5 [Schedule: 9]
Connection Class: U-1: Anchor Block - Anchor Angle Where Reqd
Net Uplift Force = 242.8 lb Uplift Resistance = 3233.3 lb
Use Anchor Block

Columns S1:C8 [Schedule: 10]
Connection Class: U-1: Anchor Block - Anchor Angle Where Reqd
Net Uplift Force = 928.4 lb Uplift Resistance = 4880 lb
Use Anchor Block

Columns S2:C10 [Schedule: 10]
Connection Class: U-1: Anchor Block - Anchor Angle Where Reqd
Net Uplift Force = 928.4 lb Uplift Resistance = 4880 lb
Use Anchor Block

LESTER BUILDINGS	CONNECTION SUMMARY	Job: T06A-15079-08-05
		Page: 7 of 7
	Dealer: Prehn Building Systems Inc.	By: Improv
	Owner: Service Master	Date: 10/1/2026

CONNECTION SUMMARY (Continued)

Columns S1:C10, S1:C15, S2:C6 [Schedule: 11] [Design Member ID: S1:C10]
Connection Class: U-1: Anchor Block - Anchor Angle Where Reqd
No Net Uplift Load at this column.
Use Anchor Block

Columns S1:C12, S2:C3, S2:C8 [Schedule: 11] [Design Member ID: S1:C12]
Connection Class: U-1: Anchor Block - Anchor Angle Where Reqd
No Net Uplift Load at this column.
Use Anchor Block

Columns S1:C17 [Schedule: 12]
Connection Class: U-1: Anchor Block - Anchor Angle Where Reqd
No Net Uplift Load at this column.
Use Anchor Block

Columns S2:C13 [Schedule: 12]
Connection Class: U-1: Anchor Block - Anchor Angle Where Reqd
No Net Uplift Load at this column.
Use Anchor Block

Columns S2:C15 [Schedule: 12]
Connection Class: U-1: Anchor Block - Anchor Angle Where Reqd
No Net Uplift Load at this column.
Use Anchor Block

Columns EP1:C2, EP1:C8 [Schedule: 13] [Design Member ID: EP1:C2]
Connection Class: U-1: Anchor Block - Anchor Angle Where Reqd
No Net Uplift Load at this column.
Use Anchor Block

Columns EP1:C3, EP1:C7 [Schedule: 14] [Design Member ID: EP1:C3]
Connection Class: U-1: Anchor Block - Anchor Angle Where Reqd
No Net Uplift Load at this column.
Use Anchor Block

Columns EP1:C4, EP1:C6 [Schedule: 15] [Design Member ID: EP1:C4]
Connection Class: U-1: Anchor Block - Anchor Angle Where Reqd
No Net Uplift Load at this column.
Use Anchor Block

Columns EP1:C5 [Schedule: 16]
Connection Class: U-1: Anchor Block - Anchor Angle Where Reqd
No Net Uplift Load at this column.
Use Anchor Block

LESTER BUILDINGS	CONNECTION SUMMARY	Job: 636395
		Page: 1 of 13
	Dealer: Mark Stiles Sr Construction LLC	By: kfl
	Owner: The John Raymond Co, LLC	Date: 5/28/2026

CONNECTION SUMMARY

—

Typical Truss to Column Connection
(7) 1/4"X6" FlatLOK, Med, Uni
Allowable Fy (Fasteners Only w/ Cd = 1) = 3556 lb
Allowable Bearing Force = 10906.5 lb = 661 psi x 5.5 in x 3 in
Applied Force (To be resisted by Fasteners Alone):
Fy_Pos = 2776.6 (3470.7 w/ Cd = 1.25)
All Net Bearing Reactions are less than Allowable Bearing Force (10906.5 lb)

Bearing Reaction
Maximum Reaction = 14377.2 lb D+Lr

Allowable Bearing = 10906.5 lb = 661 psi x 5.5 in x 3 in
Connection Capacity = 4445 lb = 3556 x 1.25
Allowable Reaction = 15351.5 lb OK

Required Bearing Length
5.01 in = (14377.2 - 3556 x 1.25) / (3 x 661)

Uplift Reaction
Maximum Reaction = 0 lb

Connection Capacity = 0 lb = 3556 x 0
Allowable Reaction = 0 lb OK (within 1.03 times allowable)

LESTER BUILDINGS	CONNECTION SUMMARY	Job: 636395
		Page: 2 of 13
	Dealer: Mark Stiles Sr Construction LLC	By: kfl
	Owner: The John Raymond Co, LLC	Date: 5/28/2026

CONNECTION SUMMARY (Continued)

Lean To Truss L1:S1:T1 to Lean To Column Connection
Truss Type: Mono Truss - Bottom Chord Bearing
Truss TC: 2x10 DFL/SYP M-23/2400 MSR 1.8E
Truss BC: 2x8 DFL/SYP M-23/2400 MSR 1.8E
Column assumption: F666 Lester No.1
4.5" FlatLok screws (qty determined in code)

Allowable Forces w/ Cd = 1.0:
Allowable Bearing = 5453.2 lb = 661 psi x 5.5 in x 1.5 in
Allowable Screw Shear = 1841 lb = 7 screws x 263 lb
(7 screws in Truss)
Assumptions: 3" wide strip in heel w/ no plate interference. Spacing per NDS Tables 12.5.1A-D
Total Allowable Fy = 7294.2 lb = 5453.2 lb Bearing + 1841 lb Screw Shear
Allowable Uplift = 1841 lb = 7 screws x 263 lb

Applied Forces:
Fxy_Res = 4533.4 lb = Sqrt(0^2 + 5666.7^2) / (Cd = 1.25) D+Lr
Fy_Pos = 4533.4 (5666.7 w/ Cd = 1.25) D+Lr
Fy_Neg = 0 (0 w/ Cd = 1.6) No uplift load cases.
All Net Bearing Reactions are less than Allowable Bearing Force (5453.2 lb)

Bearing Reaction:
Maximum Reaction = 4533.4 lb D+Lr

Connection Capacity = 7754.4 lb = 5453.2 lb Bearing + 1841 lb Screw Shear x 1.25
Allowable Reaction = 7754.4 lb OK

Uplift Reaction:
Maximum Reaction = -0 lb No uplift load cases.

Connection Capacity = 2945.6 lb = 1841 lb x 1.6
Allowable Reaction = 2945.6 lb OK

LESTER BUILDINGS	CONNECTION SUMMARY	Job: 636395
		Page: 3 of 13
	Dealer: Mark Stiles Sr Construction LLC	By: kfl
	Owner: The John Raymond Co, LLC	Date: 5/28/2026

CONNECTION SUMMARY (Continued)

Lean To Truss L1:S1:T1 to Building Column Connection
Truss Type: Mono Truss - Bottom Chord Bearing
Truss TC: 2x10 DFL/SYP M-23/2400 MSR 1.8E
Truss BC: 2x8 DFL/SYP M-23/2400 MSR 1.8E
Column : F666 Lester No.1
6" FlatLok screws (qty determined in code)

Allowable Forces w/ Cd = 1.0:
Allowable Bearing = 0 lb (all force is resisted by screws)
Allowable Screw Shear = 4734 lb = 18 screws x 263 lb
(3 screws in Corbel Block, 15 screws in Truss)
Assumptions: 3" wide strip in heel w/ no plate interference. Spacing per NDS Tables 12.5.1A-D
Total Allowable Fy = 4734 lb = 0 lb Bearing + 4734 lb Screw Shear
Allowable Uplift = 3945 lb = 15 screws x 263 lb

Applied Forces:
Fxy_Res = 4637 lb = Sqrt(0^2 + 5796.3^2) / (Cd = 1.25) D+Lr
Fy_Pos = 4637 (5796.3 w/ Cd = 1.25) D+Lr
Fy_Neg = 0 (0 w/ Cd = 1.6) No uplift load cases.
All Net Bearing Reactions are less than Allowable Bearing Force (0 lb)

Bearing Reaction:
Maximum Reaction = 4637 lb D+Lr

Connection Capacity = 5917.5 lb = 0 lb Bearing + 4734 lb Screw Shear x 1.25
Allowable Reaction = 5917.5 lb OK

Uplift Reaction:
Maximum Reaction = -0 lb No uplift load cases.

Connection Capacity = 6312 lb = 3945 lb x 1.6
Allowable Reaction = 6312 lb OK

LESTER BUILDINGS	CONNECTION SUMMARY	Job: 636395
		Page: 4 of 13
	Dealer: Mark Stiles Sr Construction LLC	By: kfl
	Owner: The John Raymond Co, LLC	Date: 5/28/2026

CONNECTION SUMMARY (Continued)

Lean To Truss L2:S2:T1 to Lean To Column Connection
Truss Type: Mono Truss - Bottom Chord Bearing
Truss TC: 2x12 DFL/SYP M-23/2400 MSR 1.8E
Truss BC: 2x10 DFL/SYP M-23/2400 MSR 1.8E
Column assumption: F666 Lester No.1
4.5" FlatLok screws (qty determined in code)

Allowable Forces w/ Cd = 1.0:
Allowable Bearing = 5453.2 lb = 661 psi x 5.5 in x 1.5 in
Allowable Screw Shear = 1841 lb = 7 screws x 263 lb
(7 screws in Truss)
Assumptions: 3" wide strip in heel w/ no plate interference. Spacing per NDS Tables 12.5.1A-D
Total Allowable Fy = 7294.2 lb = 5453.2 lb Bearing + 1841 lb Screw Shear
Allowable Uplift = 1841 lb = 7 screws x 263 lb

Applied Forces:
Fxy_Res = 4570.6 lb = Sqrt(0^2 + 5713.3^2) / (Cd = 1.25) D+Lr
Fy_Pos = 4570.6 (5713.3 w/ Cd = 1.25) D+Lr
Fy_Neg = 0 (0 w/ Cd = 1.6) No uplift load cases.
All Net Bearing Reactions are less than Allowable Bearing Force (5453.2 lb)

Bearing Reaction:
Maximum Reaction = 4570.6 lb D+Lr

Connection Capacity = 7754.4 lb = 5453.2 lb Bearing + 1841 lb Screw Shear x 1.25
Allowable Reaction = 7754.4 lb OK

Uplift Reaction:
Maximum Reaction = -0 lb No uplift load cases.

Connection Capacity = 2945.6 lb = 1841 lb x 1.6
Allowable Reaction = 2945.6 lb OK

LESTER BUILDINGS	CONNECTION SUMMARY	Job: 636395
		Page: 5 of 13
	Dealer: Mark Stiles Sr Construction LLC	By: kfl
	Owner: The John Raymond Co, LLC	Date: 5/28/2026

CONNECTION SUMMARY (Continued)

Lean To Truss L2:S2:T1 to Building Column Connection
Truss Type: Mono Truss - Bottom Chord Bearing
Truss TC: 2x12 DFL/SYP M-23/2400 MSR 1.8E
Truss BC: 2x10 DFL/SYP M-23/2400 MSR 1.8E
Column : F666 Lester No.1
6" FlatLok screws (qty determined in code)

Allowable Forces w/ Cd = 1.0:
Allowable Bearing = 0 lb (all force is resisted by screws)
Allowable Screw Shear = 4734 lb = 18 screws x 263 lb
(3 screws in Corbel Block, 15 screws in Truss)
Assumptions: 3" wide strip in heel w/ no plate interference. Spacing per NDS Tables 12.5.1A-D
Total Allowable Fy = 4734 lb = 0 lb Bearing + 4734 lb Screw Shear
Allowable Uplift = 3945 lb = 15 screws x 263 lb

Applied Forces:
Fxy_Res = 4675.1 lb = Sqrt(0^2 + 5843.9^2) / (Cd = 1.25) D+Lr
Fy_Pos = 4675.1 (5843.9 w/ Cd = 1.25) D+Lr
Fy_Neg = 0 (0 w/ Cd = 1.6) No uplift load cases.
All Net Bearing Reactions are less than Allowable Bearing Force (0 lb)

Bearing Reaction:
Maximum Reaction = 4675.1 lb D+Lr

Connection Capacity = 5917.5 lb = 0 lb Bearing + 4734 lb Screw Shear x 1.25
Allowable Reaction = 5917.5 lb OK

Uplift Reaction:
Maximum Reaction = -0 lb No uplift load cases.

Connection Capacity = 6312 lb = 3945 lb x 1.6
Allowable Reaction = 6312 lb OK

Structural Header Connections

H:S1:D3 - 8.88 x 15.75 Beam Pocket
(36) 10d Nails to Header
(18) TrussLokZ Screws to Column

H:S2:D6 - 5.38 x 11.75 Beam Pocket
(20) 10d Nails to Header
(10) TrussLokZ Screws to Column

LESTER BUILDINGS	CONNECTION SUMMARY	Job: 636395
		Page: 6 of 13
	Dealer: Mark Stiles Sr Construction LLC	By: kfl
	Owner: The John Raymond Co, LLC	Date: 5/28/2026

CONNECTION SUMMARY (Continued)

```
==============================================================
L1:S1 - LeanTo Gable Truss Connection Design - Left End
Tributary Length
    Gable Truss Trib Length = 61.5
        (Start Overhang + 1/2 Spacing to 2nd Gable Truss)
--------------------------------------------------------------
Using reactions from gable truss analysis:
    Max Overall Reaction @ Bldg Col:    2337.6 lbs  (this is divided by Cd)
    Max Uplift  Reaction @ Bldg Col:       0.0 lbs  (this is divided by Cd)
    Max Shear Estimate @ Bldg Col
         =  2337.6 lbs
--------------------------------------------------------------
    Max Overall Reaction @ LeanTo Col:   2285.2 lbs  (this is divided by Cd)
    Max Uplift  Reaction @ LeanTo Col:      0.0 lbs  (this is divided by Cd)
    Max Shear Estimate @ LeanTo Col
         = MaxReaction - (2 * 128)
         = 2285.2 - (256)
         =  2029.2 lbs
              (reduced by (2)*128 lbs due to Eave Nailer connection: two 16d R.S. nails)
--------------------------------------------------------------
Conn @ Bldg Col using fastener: 042074
    Length = 4.5"
    Allowable Single-Shear = 263 lbs
        Minimum Required Fastener Qty = 2337.6 / 263 = 9
        This count may be increased per business rules for min/max screw counts.
    Assumptions: 3" wide strip in heel w/ no plate interference. Spacing per NDS Tables 12.5.1A-D
Connection Parts @ Bldg Col:
    Qty      Part #     Description
      3      042074     (3) Screws into TC at Bldg Column
      4      042074     (4) Screws into BC at Bldg Column
      3      042074     (3) Screws into Vertical Web at Bldg Column 12" O.C.
--------------------------------------------------------------

Conn @ LeanTo Col using FlatLok fastener: 042074
    Length = 4.5"
    Single-Shear Capacity = 263 lbs
        Minimum Required Fastener Qty = 2029.2 / 263 = 8
        This count may be increased per business rules for min/max screw counts.
    Assumptions: 3" wide strip in heel w/ no plate interference. Spacing per NDS Tables 12.5.1A-D
**** WARNING: Conn @ LeanTo Col is not sufficient. The connection requires engineering attention. **
Connection Parts @ LeanTo Col:
    Qty      Part #     Description
      6      042074     (6) Screws into TC Heel at LeanTo Column
      2      042074     (2) Screws into BC Heel at LeanTo Column
==============================================================
```

LESTER BUILDINGS	CONNECTION SUMMARY	Job: 636395
		Page: 7 of 13
	Dealer: Mark Stiles Sr Construction LLC	By: kfl
	Owner: The John Raymond Co, LLC	Date: 5/28/2026

CONNECTION SUMMARY (Continued)

```
==============================================================
L1:S1 - LeanTo Gable Truss Connection Design - Right End
Tributary Length
    Gable Truss Trib Length = 60.5
        (End Overhang + 1/2 Spacing to 2nd Gable Truss)
--------------------------------------------------------------
Using reactions from gable truss analysis:
    Max Overall Reaction @ Bldg Col:    2299.7 lbs  (this is divided by Cd)
    Max Uplift  Reaction @ Bldg Col:       0.0 lbs  (this is divided by Cd)
    Max Shear Estimate @ Bldg Col
         =  2299.7 lbs
--------------------------------------------------------------
    Max Overall Reaction @ LeanTo Col:   2248.1 lbs  (this is divided by Cd)
    Max Uplift  Reaction @ LeanTo Col:      0.0 lbs  (this is divided by Cd)
    Max Shear Estimate @ LeanTo Col
         = MaxReaction - (2 * 128)
         = 2248.1 - (256)
         =  1992.1 lbs
              (reduced by (2)*128 lbs due to Eave Nailer connection: two 16d R.S. nails)
--------------------------------------------------------------
Conn @ Bldg Col using fastener: 042074
    Length = 4.5"
    Allowable Single-Shear = 263 lbs
        Minimum Required Fastener Qty = 2299.7 / 263 = 9
        This count may be increased per business rules for min/max screw counts.
    Assumptions: 3" wide strip in heel w/ no plate interference. Spacing per NDS Tables 12.5.1A-D
Connection Parts @ Bldg Col:
    Qty      Part #     Description
      3      042074     (3) Screws into TC at Bldg Column
      4      042074     (4) Screws into BC at Bldg Column
      3      042074     (3) Screws into Vertical Web at Bldg Column 12" O.C.
      2      042074     (2) Screws into top of Bearing Ply supporting Gable Truss
--------------------------------------------------------------

Conn @ LeanTo Col using FlatLok fastener: 042074
    Length = 4.5"
    Single-Shear Capacity = 263 lbs
        Minimum Required Fastener Qty = 1992.1 / 263 = 8
        This count may be increased per business rules for min/max screw counts.
    Assumptions: 3" wide strip in heel w/ no plate interference. Spacing per NDS Tables 12.5.1A-D
**** WARNING: Conn @ LeanTo Col is not sufficient. The connection requires engineering attention. **
Connection Parts @ LeanTo Col:
    Qty      Part #     Description
      6      042074     (6) Screws into TC Heel at LeanTo Column
      2      042074     (2) Screws into BC Heel at LeanTo Column
==============================================================
```

LESTER BUILDINGS	CONNECTION SUMMARY	Job: 636395
		Page: 8 of 13
	Dealer: Mark Stiles Sr Construction LLC	By: kfl
	Owner: The John Raymond Co, LLC	Date: 5/28/2026

CONNECTION SUMMARY (Continued)

```
==============================================================
L2:S2 - LeanTo Gable Truss Connection Design - Left End
Tributary Length
    Gable Truss Trib Length = 60
        (Start Overhang + 1/2 Spacing to 2nd Gable Truss)
--------------------------------------------------------------
Using reactions from gable truss analysis:
    Max Overall Reaction @ Bldg Col:    2280.6 lbs  (this is divided by Cd)
    Max Uplift  Reaction @ Bldg Col:       0.0 lbs  (this is divided by Cd)
    Max Shear Estimate @ Bldg Col
         =  2280.6 lbs
--------------------------------------------------------------
    Max Overall Reaction @ LeanTo Col:   2229.5 lbs  (this is divided by Cd)
    Max Uplift  Reaction @ LeanTo Col:      0.0 lbs  (this is divided by Cd)
    Max Shear Estimate @ LeanTo Col
         = MaxReaction - (2 * 128)
         = 2229.5 - (256)
         =  1973.5 lbs
              (reduced by (2)*128 lbs due to Eave Nailer connection: two 16d R.S. nails)
--------------------------------------------------------------
Conn @ Bldg Col using fastener: 042074
    Length = 4.5"
    Allowable Single-Shear = 263 lbs
        Minimum Required Fastener Qty = 2280.6 / 263 = 9
        This count may be increased per business rules for min/max screw counts.
    Assumptions: 3" wide strip in heel w/ no plate interference. Spacing per NDS Tables 12.5.1A-D
Connection Parts @ Bldg Col:
    Qty      Part #     Description
      3      042074     (3) Screws into TC at Bldg Column
      4      042074     (4) Screws into BC at Bldg Column
      3      042074     (3) Screws into Vertical Web at Bldg Column 12" O.C.
--------------------------------------------------------------

Conn @ LeanTo Col using FlatLok fastener: 042074
    Length = 4.5"
    Single-Shear Capacity = 263 lbs
        Minimum Required Fastener Qty = 1973.5 / 263 = 8
        This count may be increased per business rules for min/max screw counts.
    Assumptions: 3" wide strip in heel w/ no plate interference. Spacing per NDS Tables 12.5.1A-D
**** WARNING: Conn @ LeanTo Col is not sufficient. The connection requires engineering attention. **
Connection Parts @ LeanTo Col:
    Qty      Part #     Description
      6      042074     (6) Screws into TC Heel at LeanTo Column
      2      042074     (2) Screws into BC Heel at LeanTo Column
==============================================================
```

LESTER BUILDINGS	CONNECTION SUMMARY	Job: 636395
		Page: 9 of 13
	Dealer: Mark Stiles Sr Construction LLC	By: kfl
	Owner: The John Raymond Co, LLC	Date: 5/28/2026

CONNECTION SUMMARY (Continued)

==========

L2:S2 - LeanTo Gable Truss Connection Design - Right End

Tributary Length

Gable Truss Trib Length = 60
(End Overhang + 1/2 Spacing to 2nd Gable Truss)

Using reactions from gable truss analysis:

Max Overall Reaction @ Bldg Col: 2280.6 lbs (this is divided by Cd)
Max Uplift Reaction @ Bldg Col: 0.0 lbs (this is divided by Cd)
Max Shear Estimate @ Bldg Col
= 2280.6 lbs

Max Overall Reaction @ LeanTo Col: 2229.5 lbs (this is divided by Cd)
Max Uplift Reaction @ LeanTo Col: 0.0 lbs (this is divided by Cd)
Max Shear Estimate @ LeanTo Col
= MaxReaction - (2 * 128)
= 2229.5 - (256)
= 1973.5 lbs
(reduced by (2)*128 lbs due to Eave Nailer connection: two 16d R.S. nails)

Conn @ Bldg Col using fastener: 042074

Length = 4.5"
Allowable Single-Shear = 263 lbs
Minimum Required Fastener Qty = 2280.6 / 263 = 9
This count may be increased per business rules for min/max screw counts.
Assumptions: 3" wide strip in heel w/ no plate interference. Spacing per NDS Tables 12.5.1A-D

Connection Parts @ Bldg Col:

Qty	Part #	Description
3	042074	(3) Screws into TC at Bldg Column
4	042074	(4) Screws into BC at Bldg Column
3	042074	(3) Screws into Vertical Web at Bldg Column 12" O.C.
2	042074	(2) Screws into top of Bearing Ply supporting Gable Truss

---

Conn @ LeanTo Col using FlatLok fastener: 042074

Length = 4.5"
Single-Shear Capacity = 263 lbs
Minimum Required Fastener Qty = 1973.5 / 263 = 8
This count may be increased per business rules for min/max screw counts.
Assumptions: 3" wide strip in heel w/ no plate interference. Spacing per NDS Tables 12.5.1A-D

****** WARNING: Conn @ LeanTo Col is not sufficient. The connection requires engineering attention. ****

Connection Parts @ LeanTo Col:

Qty	Part #	Description
6	042074	(6) Screws into TC Heel at LeanTo Column
2	042074	(2) Screws into BC Heel at LeanTo Column

==========

Purlin Connections

Design Case - PR1:

2x8 full saddle hanger 2p truss (ConnID = trusspurlin018) (LBSKit = 741422)
Fy_Neg = 104.1 (-166.5 w/ Cd = 1.6), Fy_Pos = 316.6 (395.8 w/ Cd = 1.25)
Allowable Force = 656 lb

Girt Connections

Design Case - GW3:

(4) 10d Galv Box . nails plus 3 percent (ConnID = wallgirt_FF_GrTh2x4) (LBSKit = 040076)
Fy_Neg = 113 (-180.8 w/ Cd = 1.6)
Allowable Force = 308.8 lb

LESTER BUILDINGS	CONNECTION SUMMARY	Job: 636395
		Page: 10 of 13
	Dealer: Mark Stiles Sr Construction LLC	By: kfl
	Owner: The John Raymond Co, LLC	Date: 5/28/2026

CONNECTION SUMMARY (Continued)

Design Case - GW1:
(4) 10d Galv Box . nails plus 3 percent (ConnID = wallgirt_FF_GrTh2x4) (LBSKit = 040076)
Fy_Neg = 113 (-180.8 w/ Cd = 1.6)
Allowable Force = 308.8 lb

Design Case - GW2:
(4) 10d Galv Box . nails plus 3 percent (ConnID = wallgirt_FF_GrTh2x4) (LBSKit = 040076)
Fy_Neg = 113 (-180.8 w/ Cd = 1.6)
Allowable Force = 308.8 lb

EW Column Bracing Summary

E1:C2 - Diagonal Gable Brace with Bottom Chord Brace

E1:C3 - Diagonal Gable Brace with Bottom Chord Brace

E1:C4 - Diagonal Gable Brace with Bottom Chord Brace

E1:C5 - Diagonal Gable Brace with Bottom Chord Brace

E2:C2 - Diagonal Gable Brace with Bottom Chord Brace

E2:C3 - Diagonal Gable Brace with Bottom Chord Brace

E2:C4 - Diagonal Gable Brace with Bottom Chord Brace

E2:C5 - Diagonal Gable Brace with Bottom Chord Brace

Column Schedule - Main Building Columns (See below for LeanTo Columns)

1,11	S1:C2, S1:C3, S2:C2 to S2:C6
2	S1:C1, S2:C1
3	E1:C2, E1:C5, E2:C2, E2:C5
4	E1:C3, E1:C4, E2:C3, E2:C4
5	S1:C4
6	S1:C5
7	S1:C8
8	S1:C9
9	S2:C7
10	S2:C9

Column Sections - Main Building Columns (See below for LeanTo Columns)

1	FS6666
11	FS6666
2	FE666
3	FE666
4	FE666
5	FS6666
6	f0FS0000J0
7	f0J0FS0000
8	f6FE888
9	FS6666J6
10	f8J6FE666

Column Anchorage - Main Building Columns (See below for LeanTo Columns)

LESTER BUILDINGS	CONNECTION SUMMARY	Job: 636395
		Page: 11 of 13
	Dealer: Mark Stiles Sr Construction LLC	By: kfl
	Owner: The John Raymond Co, LLC	Date: 5/28/2026

CONNECTION SUMMARY (Continued)

Columns S1:C2, S1:C3 [Schedule: 1] [Design Member ID: SW Column]
Connection Class: U-1: Concrete Collar
No Net Uplift Load at this column.
Required number of 3/4" dia. bars = 1
Bar Length = 12 in. Part Number = 100045

Columns S2:C2 to S2:C6 [Schedule: 11] [Design Member ID: S2:C2]
Connection Class: U-1: Concrete Collar
No Net Uplift Load at this column.
Required number of 3/4" dia. bars = 1
Bar Length = 12 in. Part Number = 100045

Columns S1:C1, S2:C1 [Schedule: 2] [Design Member ID: Corner Column]
Connection Class: U-1: Concrete Collar
Net Uplift Force = 164.4 lb Uplift Resistance = 3957.1 lb
Required number of 3/4" dia. bars = 1
Bar Length = 12 in. Part Number = 100045

Columns E1:C2, E1:C5, E2:C2, E2:C5 [Schedule: 3] [Design Member ID: E1:C2]
Connection Class: U-1: Concrete Collar
No Net Uplift Load at this column.
Required number of 3/4" dia. bars = 1
Bar Length = 12 in. Part Number = 100045

Columns E1:C3, E1:C4, E2:C3, E2:C4 [Schedule: 4] [Design Member ID: E1:C3]
Connection Class: U-1: Concrete Collar
No Net Uplift Load at this column.
Required number of 3/4" dia. bars = 1
Bar Length = 12 in. Part Number = 100045

Columns S1:C4 [Schedule: 5]
Connection Class: U-1: Concrete Collar
No Net Uplift Load at this column.
Required number of 3/4" dia. bars = 1
Bar Length = 12 in. Part Number = 100045

Columns S1:C5 [Schedule: 6]
Connection Class: U-1: Concrete Collar
No Net Uplift Load at this column.
Required number of 3/4" dia. bars = 1
Bar Length = 18 in. Part Number = 100046

Columns S1:C8 [Schedule: 7]
Connection Class: U-1: Concrete Collar
No Net Uplift Load at this column.
Required number of 3/4" dia. bars = 1
Bar Length = 18 in. Part Number = 100046

Columns S1:C9 [Schedule: 8]
Connection Class: U-1: Concrete Collar
No Net Uplift Load at this column.
Required number of 3/4" dia. bars = 1
Bar Length = 12 in. Part Number = 100045

Columns S2:C7 [Schedule: 9]
Connection Class: U-1: Concrete Collar
No Net Uplift Load at this column.
Required number of 3/4" dia. bars = 1
Bar Length = 18 in. Part Number = 100046

LESTER BUILDINGS	CONNECTION SUMMARY	Job: 636395
		Page: 12 of 13
	Dealer: Mark Stiles Sr Construction LLC	By: kfl
	Owner: The John Raymond Co, LLC	Date: 5/28/2026

CONNECTION SUMMARY (Continued)

Columns S2:C9 [Schedule: 10]
Connection Class: U-1: Concrete Collar
No Net Uplift Load at this column.
Required number of 3/4" dia. bars = 1
Bar Length = 18 in. Part Number = 100046

Girt Connections

Design Case - GW1:
(4) 10d Galv Box . nails plus 3 percent (ConnID = wallgirt_FF_GrTh2x4) (LBSKit = 040076)
Fy_Neg = 97.7 (-156.3 w/ Cd = 1.6)
Allowable Force = 308.8 lb

Design Case - GW4:
(4) 10d Galv Box . nails plus 3 percent (ConnID = wallgirt_FF_GrTh2x4) (LBSKit = 040076)
Fy_Neg = 97.7 (-156.3 w/ Cd = 1.6)
Allowable Force = 308.8 lb

EW Column Bracing Summary

L1.E1:C2 - Bottom Chord Brace Only

L1.E2:C2 - Bottom Chord Brace Only

Girt Connections

Design Case - GW1:
(4) 10d Galv Box . nails plus 3 percent (ConnID = wallgirt_FF_GrTh2x4) (LBSKit = 040076)
Fy_Neg = 101.7 (-162.7 w/ Cd = 1.6)
Allowable Force = 308.8 lb

Design Case - GW5:
(4) 10d Galv Box . nails plus 3 percent (ConnID = wallgirt_FF_GrTh2x4) (LBSKit = 040076)
Fy_Neg = 101.7 (-162.7 w/ Cd = 1.6)
Allowable Force = 308.8 lb

EW Column Bracing Summary

L2.E1:C2 - Bottom Chord Brace Only

L2.E2:C2 - Bottom Chord Brace Only

Column Schedule - LeanTo Columns

12 L1.S1:C2 to L1.S1:C5, L2.S1:C2 to L2.S1:C7
13 L1.S1:C1, L1.S1:C6, L2.S1:C1, L2.S1:C8
14 L1.E1:C2, L1.E2:C2, L2.E1:C2, L2.E2:C2

Column Sections - LeanTo Columns

12 FS666
13 FE666
14 FE6666

Column Anchorage - LeanTo Columns

LESTER BUILDINGS	CONNECTION SUMMARY	Job: 636395
		Page: 13 of 13
	Dealer: Mark Stiles Sr Construction LLC	By: kfl
	Owner: The John Raymond Co, LLC	Date: 5/28/2026

CONNECTION SUMMARY (Continued)

Columns L1.S1:C2 to L1.S1:C5 [Schedule: 12] [Design Member ID: L1.S1:C2]
Connection Class: U-1: Concrete Collar
No Net Uplift Load at this column.
Required number of 3/4" dia. bars = 1
Bar Length = 12 in. Part Number = 100045

Columns L2.S1:C2 to L2.S1:C7 [Schedule: 12] [Design Member ID: L2.S1:C2]
Connection Class: U-1: Concrete Collar
No Net Uplift Load at this column.
Required number of 3/4" dia. bars = 1
Bar Length = 12 in. Part Number = 100045

Columns L1.S1:C1, L1.S1:C6 [Schedule: 13] [Design Member ID: L1.S1:C1]
Connection Class: U-1: Concrete Collar
No Net Uplift Load at this column.
Required number of 3/4" dia. bars = 1
Bar Length = 12 in. Part Number = 100045

Columns L2.S1:C1, L2.S1:C8 [Schedule: 13] [Design Member ID: L2.S1:C1]
Connection Class: U-1: Concrete Collar
No Net Uplift Load at this column.
Required number of 3/4" dia. bars = 1
Bar Length = 12 in. Part Number = 100045

Columns L1.E1:C2 [Schedule: 14]
Connection Class: U-1: Concrete Collar
No Net Uplift Load at this column.
Required number of 3/4" dia. bars = 1
Bar Length = 12 in. Part Number = 100045

Columns L1.E2:C2 [Schedule: 14]
Connection Class: U-1: Concrete Collar
No Net Uplift Load at this column.
Required number of 3/4" dia. bars = 1
Bar Length = 12 in. Part Number = 100045

Columns L2.E1:C2 [Schedule: 14]
Connection Class: U-1: Concrete Collar
No Net Uplift Load at this column.
Required number of 3/4" dia. bars = 1
Bar Length = 12 in. Part Number = 100045

Columns L2.E2:C2 [Schedule: 14]
Connection Class: U-1: Concrete Collar
No Net Uplift Load at this column.
Required number of 3/4" dia. bars = 1
Bar Length = 12 in. Part Number = 100045